HONGDA BEARINGS

HDB®



嘉善洪达复合轴承有限公司
JIASHAN HONGDA COMPOSITE BEARING CO.,LTD

江西洪达自润滑轴承有限公司
JIANGXI HONGDA SELF-LUBRICATING BEARING CO.,LTD

From Raw Materials to Finished Products Integrated Service **Providers**

从原材料到成品的一体式服务商

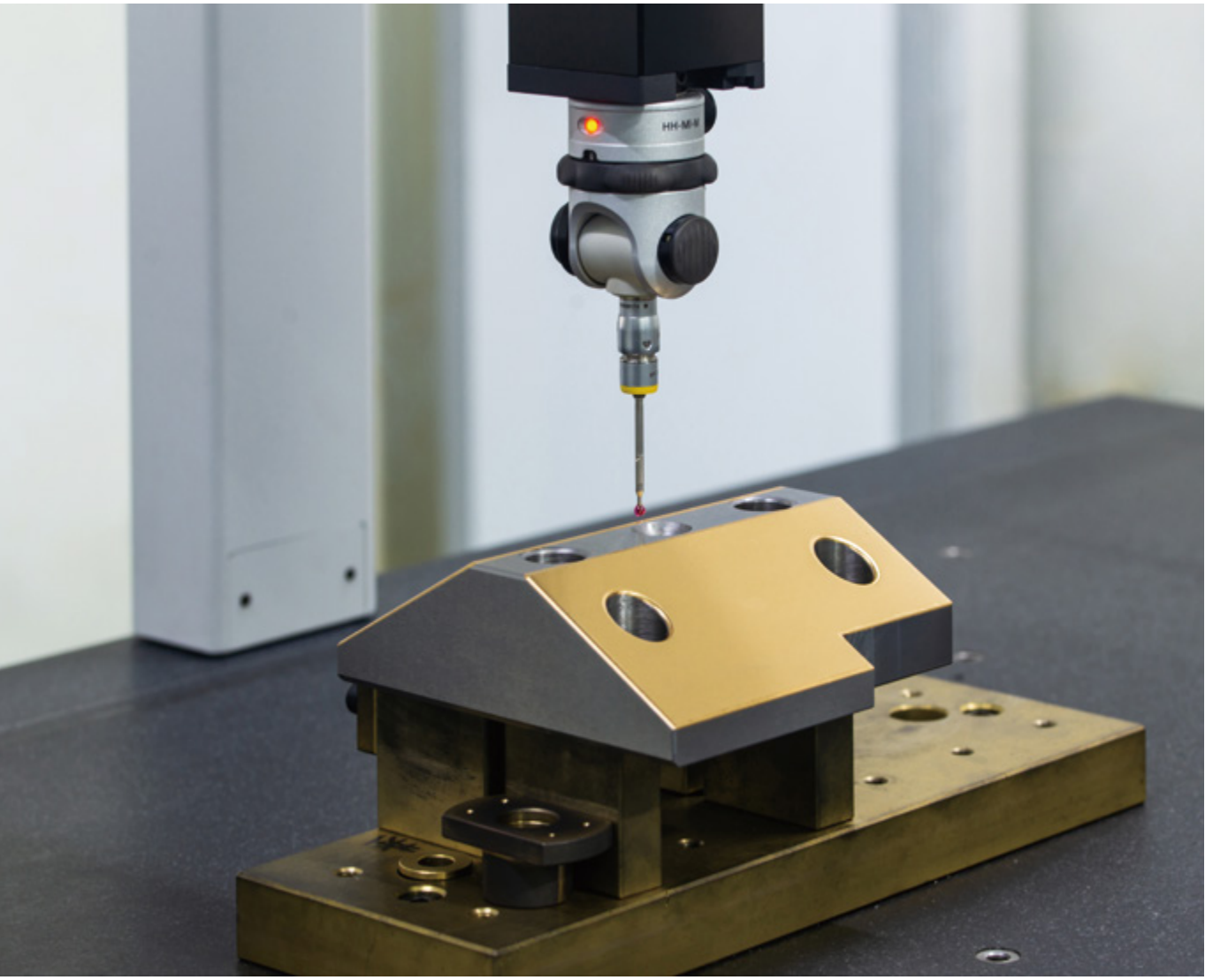

COMPANY **INTRODUCTION** 公司简介

公司办公楼

Company office building

洪达轴承是由嘉善洪达复合轴承有限公司和江西洪达自润滑轴承有限公司组成，公司专业生产各种型号系列无油轴承的实体企业。年产各种规格无油轴承5千万套以上，各项指标名列前茅。

主要产品JDB镶嵌系列轴承、铜套、滑板、毛坯系列，FB090系列轴承，JF800双金属系列轴承，SF系列自润滑轴承等十大系列产品，公司于2001年9月又通过了ISO9001：2000质量管理认证。产品质量在技术监督局抽样中各项指标全部合格。

产品广泛应用于各种机械传动部位。如：汽车、摩托车、电子、 电器、轻工、化工、液压机械、水工机械等领域，深受广大用户的一致好评。“为客户创造价值是我们所有工作的核心”，本公司欢迎各界朋友与我们建立业务关系，真诚合作，共同发展。

Hongda Bearing Co., Ltd. is composed of Jiashan Hongda Composite Bearing Co., Ltd. and Jiangxi Hongda Self-lubricating Bearing Co., Ltd. The company specializes in producing various types of series of oilless bearings. Annual turnout of oilless bearing of various specifications is more than 50 million sets, and each index ranks in leading.

The mainly products HDB-JDB solid-lubricant-inlaid bearing series, Copper bushings, HDB-90 wrapped bronze bearing series, HDB-80 Bimetal bushings, SF series and so on. The company had passed the ISO9001: 2000 Quality System Authentication in September 2001. Product quality in each index in technical supervision bureau sampling all qualified.

Products are widely applied in all kinds of mechanical transmission parts. Such as: automobile, motorcycle, electronics, electrical appliances, light industry, chemical industry, hydraulic mechanical and hydraulic machinery and other fields, win the user's consistent high praise. "Customer satisfaction is our work behavior guide, our company appreciate to establish business relations, sincere cooperation and common with friends from all over the world.

GUOBIAOXINGYE Certification (Beijing) Co.,Ltd
certificate of conformaity of

QUALITY MANAGEMENT SYSTEM CERTIFICATION

This is to certify that the system of

Certificate No:24518010088R0M

Jiashan Hongda Composite Bearing Co., Ltd

Unified social credit code:91330421725878451G

The registered address: NO. 28, Hongfeng Road, Tianning Town, Jiashan County

ZIP:314108

Business address: NO. 28, Hongfeng Road, Tianning Town, Jiashan County

ZIP:314108

The Management System Is In Conformity With

GB/T 19001-2016 idt ISO9001:2015 standard

Scope of certification

Production of oilless bearings

Date of issue: February 2, 2018

Date of expiry: February 1, 2021

The organization certified must accept the surveillance audit on time during the period of validity of the certificate.The certificate does not keep effective until passes the surveillance audit on time.The certificate information can be found at the official website of CNCA(www.cnca.gov.cn)

GBXY

General Manager:Diao Guohui

Address: Room B232,No.124
Chuang-tzu village,Fengtai District,Beijing 100070,China
Tel: 010-67083593
Web: https://www.gbxyrz.com

COMPANY **OVERVIEW** 公司概况

- 2000年6月在浙江嘉善成立，是一家专业生产滑动轴承系列产品的大型企业
- 2001年9月通过ISO9001质量体系认证
- 2005年在江西鹰潭成立子公司，完成了从浇筑坯料到最后精加工一条龙飞跃式的发展
- 2018年开始技术改造，引进自动化生产线，进入智能制造
- 现198员工，占地面积39,000平米
- 生产规模：2018年产值1.2亿元人民币
- 产品出口德国、意大利、日本等二十多个国家和地区

- Established in Jiashan, Zhejiang Province in June 2000, it is a large-scale enterprise specializing in the production of sliding bearing products.
- In September 2001, passed the ISO9001 quality system certification.
- In 2005, a subsidiary company was established in Yingtan, Jiangxi Province, and completed the development from casting to blank finishing.
- In 2018, technical transformation began, and automated production lines were introduced to enter smart manufacturing.
- 198 employees, covering an area of 39,000 square meters.
- Production scale: 2018 yuan output value of 120 million yuan.
- Products are exported to more than 20 countries and regions such as Germany, Italy and Japan.

毛胚浇铸车间 Hair casting workshop

毛坯板材切割 Blank sheet cutting

毛坯加工车间 Rough processing workshop

卷制类板材烧结 Coiled sheet

磨加工 Grinding

机械手臂生产车间

Robot arm production workshop

江西工厂拥有大型恒温车间，新增年产30万套自动化精密模具生产线，企业形成年产100万套精密模具的生产能力。工厂现有大型成品库，占地面积1200平方米，标准库存16万件

The Jiangxi factory has a large-scale constant temperature workshop, with an annual turnout of 300,000 sets of automated precision mold production lines. The company has an annual production capacity of 1 million sets of precision molds. The factory has a large finished product warehouse, covering an area of 1200 square meters, with a standard inventory of 160,000 pieces.

整个团队具有共同的事业远景，具有较强的社会适应能力，拥有项目经营、资本运作的理念和经验。团队成员拥有良好的分工合作及团队协作精神，公司内部凝聚力强，职员责任心强，确保了公司各项业务实现了高效运转和高速发展。

成品加工车间

Finished product processing workshop

The whole team has a common career vision, strong social adaptability, and the concept and experience of project management and capital operation. The team members have a good division of labor and teamwork spirit. The company has strong internal cohesiveness and strong sense of responsibility, ensuring efficient operation and rapid development of the company's various businesses.

成品加工车间

Equipment

工厂拥有高精密检测设备：直读光谱分析仪、金相分析仪、硬度检测设备、拉力测试机、摩擦磨损测试机、高精度的三坐标测量仪和粗糙度测量仪等一套完整的测试和检测设备。

The factory has high-precision testing equipment: direct reading spectrum analyzer, metallographic analyzer, hardness testing equipment, tensile testing machine, friction and wear testing machine, high-precision coordinate measuring machine and roughness measuring instrument, etc. Testing Equipment.

光谱设备 Spectroscopic equipment

三坐标检测 Three-coordinate detection

拉力试验机 Tensile testing machine

摩擦磨损设备 Friction and wear equipment

成品轴套检测 Finished bushing inspection

成品仓库 Product warehouse

Product Data Overview 产品数据总览

产品照片 Product Photo						
	JDB 系列			850 系列		
名称 Product Name	高力黄铜镶嵌固体润滑剂轴承 CuZn25Al5Fe3Mn3 inlaid solid lubricant bearing	高力黄铜镶嵌水体润滑剂轴承 High-force brass inlaid water body lubricant bearing	特硬高力黄铜镶嵌固体润滑剂轴承 Special hard CuZn25Al5Fe3Mn3 inlaid solid lubricant bearing	钢铸高力黄铜镶嵌固体润滑剂轴承 Steel cast CuZn25Al5Fe3Mn3 inlaid solid lubricant bearing	钢铸锡青铜轴承 Steel cast tin bronze bearing	钢烧结铁镍合金轴承 Steel sintered iron-nickel alloy bearing
材料 Material	高力黄铜 + 固体润滑剂 CuZn25Al5Fe3Mn3 + solid lubricant	高力黄铜 + 水体润滑剂 CuZn25Al5Fe3Mn3 + water body lubricant	特硬高力黄铜 + 固体润滑剂 Extra hard high strength brass + solid lubricant	高力黄铜 + 固体润滑剂 CuZn25Al5Fe3Mn3 + solid lubricant	锡青铜 Tin bronze	铁镍合金 + 固体润滑剂 Iron-nickel alloy + solid lubricant
				C45	C45	C45
硬度 Hardness	≥210HB	≥210HB	≥240HB	≥210HB	≥70HB	≥45HB
压力 Pressure P(N/mm²)	50	50	75	100	40	50
	※150	※150	※180	※250	※140	※120
速度 Speed V（m/s）	NL 0.5	NL 0.25	NL 0.25	NL 0.5	NL 0.4	NL 0.7
	PL 1.0		PL 0.5	PL 1.0	PL 0.85	PL 1.6
PV 值 PV value N/mm²·m/s	NL 1.65	NL 1.65	NL 1.65	NL 1.65	NL 1.0	NL 1.5
	PL 3.25		PL 3.25	PL 3.25	PL 2.0	PL 2.5
摩擦系数 Coefficient of friction（f）	0.03~0.16	0.03~0.16	0.03~0.16	0.03~0.16	0.03~0.16	0.03~0.15
导热系数 Thermal Conductivity （m·k）-1	45W	45W	45W	41W	40W	25W
热膨胀系数 Thermal expansion coefficient （10-5/° C）	1.9	1.9	1.9	1.9	1.8	1.4
使用温度 Operating temperature（° C）	- 40 ~ +300	- 40 ~ +80	- 40 ~ +300	- 100 ~ +300	- 40 ~ +300	- 100 ~ +400
	延伸率 Elongation 12%	延伸率 Elongation 12%	延伸率 Elongation 2%	结合强度 Bond strength 430N/mm²	结合强度 Bond strength 430N/mm²	结合强度 Bond strength 150N/mm²
润滑条件 Lubrication condition	NL / PL	NL	NL / PL	NL / PL	NL / PL	PL
大气 atmosphere	○ / ○	○	○ / ○	○ / ○	○ / ○	○
海水 seawater	× / -	△	× / -	× / ×	× / ×	-
耐磨性 Wear resistance	○	○	○	○	○	○
耐冲击性 Impact resistance	○	○	△	○	○	△
可供形式 Available form						

NL	不加油	○	适用、优良	-	不适用	※	静载荷
PL	定期加油	△	有条件使用、略差	×	不能使用		

Product Data Overview 产品数据总览

				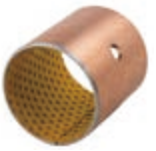	
850 系列	**80 系列**	**90 系列**	**10 系列**	**20 系列**	**30 系列**
钢烧结 铜合金轴承 Steel sintered copper alloy bearing	烧结卷制轴承 Sintered rolled bearing	青铜卷制轴承 Bronze rolled bearing	自润滑卷制轴承 Self-lubricating rolled bearing	边缘润滑卷制轴承 Edge lubrication rolled bearing	非金属自润滑轴承 Non-metallic self-lubricating bearing
铜合金 + 固体润滑剂 Copper alloy + solid lubricant	铜合金 Copper alloy	青铜 bronze	PTFE+ 铜粉 copper powder	POM+ 铜粉 copper powder	POM+ 润滑剂 Lubricant
C45	碳钢 Carbon steel		碳钢 Carbon steel	碳钢 Carbon steel	
≥40HB	≥60HB	≥110HB	≥56HD	≥82HD	≥82HD
45	40	40	140	140	18
※100	※120	※120	※250	※250	※65
NL 0.6	NL 2.0	NL 2.0	NL 2.0	NL 2.0	NL 1
PL 1.4			PL 2.5	PL 2.5	
NL 1.4	NL 2.8	NL 2.8	NL 1.8	NL 2.8	NL 0.6
PL 2.3			PL 3.6	PL 3.6	
0.03~0.15	0.08~0.25	0.08~0.25	0.03~0.2	0.05~0.2	0.09~0.2
32W	40W	58W	42W	4W	0.2W
1.5	1.7	1.8	1.1	1.1	0.9
- 100 ~ +380	- 40 ~ +250	- 100 ~ +200	- 150 ~ +280	- 150 ~ +250	- 40 ~ +80
结合强度 Bond strength 150N/mm²	延伸率 28%	延伸率 Elongation 40%	延伸率 Elongation 28%	延伸率 Elongation 28%	延伸率 Elongation 36%
PL	NL	NL	NL	NL	NL
○	○	○	○	○	○
×	×	△	×	×	△
○	○	○	○	○	○
△	△	△	○	△	△
					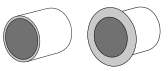

>>> CONTENTS 目录

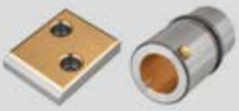

HDB-JDB 系列

固体润滑轴承

Solid-Lubricant-Inlaid Bushings

Directory 目录

JDB Self-lubricating Guide bush
JDB 自润滑导套

Directory 目录

JDB Self-lubricating Guide bush
JDB 自润滑导套

HDB-JDB

Solid-Lubricant Bearings
固体润滑轴承

Application 应用特点

HDB-JDB-10 solid lubricant embedded bushing is a new type made from strong brass and homogeneously embedded with solid lubricant in its body. It breaks through the limit of general bearing whose lubrication depends on oil film. So it is suitable for high temperature, heavy load, anti-corrosion, or where oil is hard to be introduced. It is performance doubles both on hardness and wear-friction. It is now widely applied in successive casting machines, steel rollers in metallography, mineral machine, ships, steam turbine, and injection molding machines for plastics.

HDB-JDB-20 suitable for low load position, wear performance worsens greatly when under middle or high load, it can be applied in furnace door linage, furnace, conveyor, tool machines, light industries, etc.

HDB-JDB-30 suitable for low load position, wear performance worsens when under middle or high load. The mating layer is same as HDB-JDB-20 so that more cost-saving than HDB-JDB-2 whereas compression strength increases and weldable. Most suitable for dry position in construction machinery, metallurgical machines, conveyor machines etc.

HDB-JDB-40 can be used under low speed rotation, middle and high load. Due to its super high hardness, when under high load, it over performs than other JDB type. Not suitable for water. Acid, alkali circumstances. Most suitable for the supporting position of hoisting machine,e,g. Bulldozer supporter, hoister supporter, Crane supporter etc.

HDB-JDB-50 is a typical material product. It can instead of material of HDB-JDB-10 when the machanical preformance requirement not very high. It can reduct the cost and meet the operation requiremert. Such as dieguider, plastrc in jection machines ect.

HDB-JDB-10是在以高力黄铜的基体上镶嵌固体润滑剂的一新产品，它突破了一般轴承依靠油膜润滑的界限。适用于高温，高载，耐腐蚀或无法加油等场合条件下使用。它的硬度比一般铜套高一倍，耐磨性能也高出一倍。目前广泛应用于冶金连铸机、轧钢设备、矿山机械、船舶、汽轮机、注塑机以及设备生产流水线中。

HDB-JDB-20主要适应低载高温中速的使用场合，例如壁炉门铰链。烘炉滚道、轻工机械、机床工业等。

HDB-JDB-30的内材与HLDB-JDB-20同样，除了具有HLDB-JDB-20的功能外，还体现了节省成本，提高抗压强度和可以端面与基体焊接安装的作用，适用于建筑机械、冶金机械和输送机械中的不加油润滑部位。

HDB-JDB-40是一种加强型的产品，它具有极高的抗压性能，在起重机械的支撑部位特别适应，例：挖土机支撑、卷扬机支撑、吊车支撑等。但由于基体为钢材，所以不宜在水中或酸、碱的场合使用。

HDB-JDB-50是一种典型的省材产品。在机械性能要求不是很高的地方，可作取HLDB-JDB-10替代材料使用，能大大地降低成本，满足使用要求，例：模具导柱、注塑机模架等。

The Advantages of the Solid-lubricant-Embedded Bearings 镶嵌式固体润滑轴承的优点

Dry operation.
1、无给油可使用

Can be Performed well with high load and low speed.
2、高载荷、低转速的情况，仍可发挥优越的性能

Rreciprocating motion, wagging motion, start and stop frequently are difficulty for keeping oil film. It still may play advantageous of wear-resistance.
3、往返运动、摇摆运动、起动停止频繁等油膜形成困难的场所，仍可发挥优越的耐磨性

Excellent chemical resistance and anti-corrosion.
4、优越的耐药品性及耐蚀性

Flexible, simple, convenient and abundant designing of standard, can be choosed by standard axes.
5、设计灵活、简单、方便，丰富的标准品，可配标准轴心使用

Solid Lubricants 固体润滑剂

Lubricant 固体润滑剂	高纯石墨+添加剂 SL1 Graphite	SL4+MoS_2 PTFE+MoS_2+CF
Features 特性	Good wear performance and chemical stability, temperature limit 400°C 很好的耐磨性和化学稳定性，使用温度＜400°C	Lowest friction coefficient and good water lubrication, temperature limit 300°C 极低的摩擦系数和很好的水润滑性，使用温度＜300°C
Typical application 典型用途	Suit for general machines and under atmosphere 应用于一般机械，在大气中使用	Suit for water and seawater lubricant, such as ship 应用于水、海水润滑、如船舶

Alloy 合金材料

Project 项目	Model 型号	HDB-JDB-50	HDB-JDB-52	HDB-JDB-53	HDB-JDB-54	HDB-JDB-56
Alloy material standard comparison table 合金材料各标准对照表	Chinese brand 中国牌号 GB1776-87	CuZn25Al5Fe3Mn3	CuAl9Fe4Ni4Mn2	CuSn5Pb5Zn5	GCr15	GB5675-85HT250
	International 国际 ISO1338	GCuZn25Al5Fe3Mn3	CuAl10Fe5Ni5	QSn5-5-5	B1	185Gr250
	Germany 德国 DIN	DIN1709G-CuZn25A15/2.0598	DIN17656 GB-CuAL9Ni/2.1096	DIN1705 G-CuSn5Znpb/2.1096	100Cr16	DIN17007 GG25/0.6025
	Japan 日本 JIS	H5102 CAC304	H5114 CAC703	H5111 CAC406	SUJ2	FC250
	United States 美国 ASTM/UNS	B30-92 C86300	B30-92 C95800	B30-92 C83600	E52100	ASTM Class40
Alloy material chemical composition 合金材料化学成分	Cu(%)	Rest	Rest	Rest	*	*
	Sn(%)	*	*	4.0~6.0	*	*
	Zn(%)	22.0~28.0	*	4.0~6.0	*	*
	Ni(%)	*	4.0-5.0	*	*	*
	Al(%)	5.0~7.0	8.5-9.5	*	*	*
	Fe(%)	2.5~4.0	3.0-4.5	*	Rest	Rest
	Mn(%)	2.5~5.0	0.8-1.5	*	0.20-0.40	0.905-1.3
	Cr(%)	*	*	*	1.30-1.65	*
	C(%)	*	*	*	0.95-1.05	2.5-4.0
	Si(%)	*	*	*	0.15-0.35	1.0-1.3
	Pb(%)	*	*	4.0~6.0	*	*

1210
1211

Self lubricating gasket
自润滑垫片

1210.

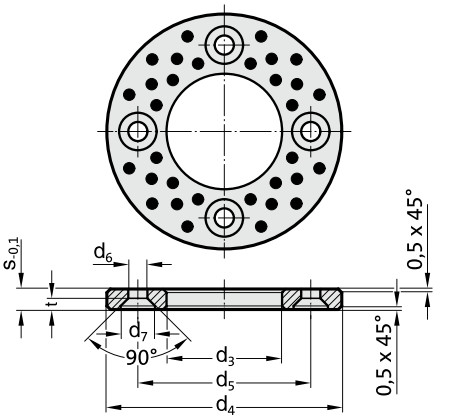

1211.

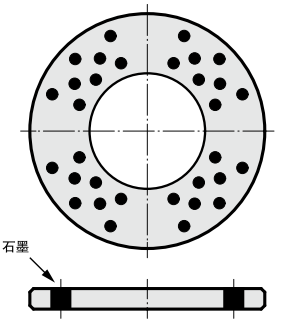

Material 材料:

CuZn25Al5Fe3Mn3+ 固体润滑剂 Solid lubricant

1210./1211. Self lubricating gasket 1210./1211. 自润滑垫片																							
d_1	10	12	13	14	15	16	18	20	25	30	35	40	45	50	55	60	65	70	75	80	90	100	120
d_3	10.2	12.2	13.2	14.2	15.2	16.2	18.2	20.2	25.2	30.2	35.2	40.2	45.3	50.3	55.3	60.3	65.3	70.3	75.3	80.3	90.5	100.5	120.5
d_4	30	40	40	40	50	50	50	50	55	60	70	80	90	100	170	120	125	130	140	150	170	190	200
d_5	20	28	28	28	28	28	35	35	40	45	50	60	67.5	75	85	90	95	100	110	120	140	160	175
d_6	3.4	3.4	3.4	3.4	3.4	3.4	3.4	5.5	5.5	5.5	5.5	6.6	6.6	6.6	6.6	9	9	9	9	9	11	11	11
d_7	6.9	6.9	6.9	6.9	6.9	6.9	6.9	11.5	11.5	11.5	11.5	13.7	13.7	13.7	13.7	18.3	18.3	18.3	18.3	18.3	22.7	22.7	22.7
s	3	3	3	3	3	3	3	5	5	5	5	7	7	8	8	8	8	10	10	10	10	10	10
t	1.8	1.8	1.8	1.8	1.8	1.8	1.8	3	3	3	3	3.6	3.6	3.6	3.6	4.6	4.6	4.6	4.6	4.6	5.9	5.9	5.9

Order 订购

Catalog No. 目录号	.	d_3	.	s
1210	.	020	.	005
1211	.	020	.	005

1220

Self-Lubricating Guide bush
自润滑导套

1220.

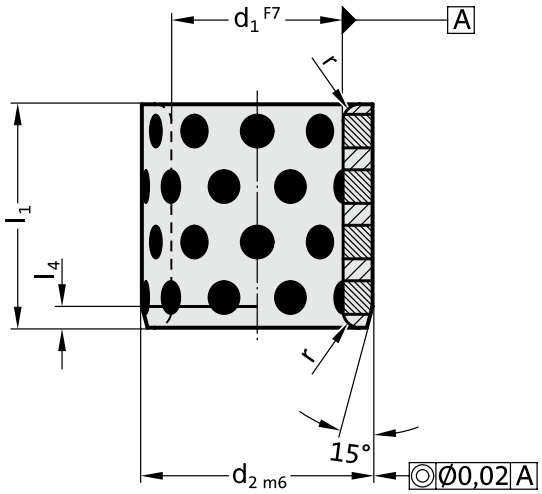

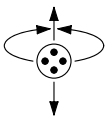

Material 材料:

CuZn25Al5Fe3Mn3+ 固体润滑剂 Solid lubricant

Description 说明:

shaft sleeve can be used in the radial and axial.
轴套可以在径向和轴向使用。

Note 注意:

The inner diameter contracts when pressed.
压入时内径收缩。

1220. Self-Lubricating Guide bush
1220. 自润滑导套

d_1	8	10	10	12	13	14	15	16	18	19	20	20	20	24	25	25	25	28	30	30	30	31.5	32	35	35	38	40	40
d_2	12	14	15	18	19	20	21	22	24	25	26	28	30	32	32	33	35	38	38	40	42	40	42	44	45	48	50	55
r	0.5	0.5	0.5	0.5	0.5	0.5	0.75	0.75	0.75	0.75	0.75	0.75	0.75	0.75	0.75	0.75	0.75	0.75	0.75	0.75	0.75	0.75	0.75	0.75	0.75	1.5	1.5	1.5
l_4	2	2	2	2	2	2	2	2	2	2	4	4	4	4	4	4	4	4	4	4	4	4	4	4	4	4	4	4
l_1																												
8	●	●																										
10	●	●	●	●	●	●	●	●																				
12	●	●		●		●	●	●																				
15	●	●		●	●	●	●	●	●			●																
16				●	●		●	●	●			●	●			●	●											
20		●		●	●	●	●	●	●			●	●			●	●		●	●					●		●	
25				●		●	●	●	●			●	●			●	●		●	●				●	●		●	●
30				●		●	●	●	●			●	●			●	●	●	●	●		●	●	●	●	●	●	●
35								●	●			●	●			●	●		●	●				●	●		●	●
37										●		●																
40								●	●		●	●	●			●	●	●	●	●		●	●	●	●	●	●	●
47														●		●												
50												●			●	●	●		●	●				●	●		●	●
60																●			●	●	●		●	●	●		●	●
70																											●	
77																										●	●	
80																											●	

1220

Self-Lubricating Guide bush
自润滑导套

1220.

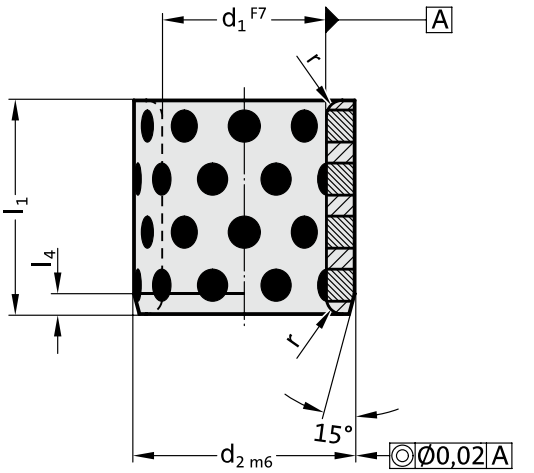

Material 材料:

CuZn25Al5Fe3Mn3+ 固体润滑剂 Solid lubricant

Description 说明:

shaft sleeve can be used in the radial and axial.
轴套可以在径向和轴向使用。

Note 注意:

The inner diameter contracts when pressed.
压入时内径收缩。

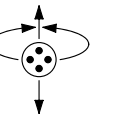

1220. Self-Lubricating Guide bush
1220. 自润滑导套

d_1	45	45	45	50	50	50	55	60	60	63	65	70	70	75	75	80	80	90	100	110	120	125	130	140	150	160
d_2	55	56	60	60	62	65	70	74	75	75	80	85	90	95	96	100	100	110	120	130	140	145	150	160	170	180
r	1.5	1.5	1.5	1.5	1.5	1.5	2	2	2	2	2	2	2	2	2	2	2	2	2	2	2	2	2	2	2	2
l_4	4	4	4	4	4	4	4	4		4	4	4	4	4	4	4	4	4	4	4	4	4	4	4	4	4
l_1																										
30	●	●	●	●	●	●		●	●																	
35	●	●	●	●	●			●	●			●														
40	●	●	●	●	●	●	●	●	●			●				●	●									
50	●	●	●	●	●	●	●	●	●		●	●	●			●	●									
60	●	●	●	●	●	●	●	●	●	●	●	●	●	●	●	●	●		●	●						
70			●	●	●	●	●	●	●	●	●	●	●	●	●	●	●		●	●						
80			●	●		●		●	●	●	●	●	●	●	●	●	●	●	●	●	●	●				
95				●																						
100						●			●			●		●	●	●	●		●	●	●	●	●	●	●	●
120										●						●	●		●	●	●	●	●			
130																							●			
140																	●			●		●		●		
150																									●	●

Order 订购

Catalog No. 目录号	.	d_1	.	d_2	.	l_1
1220	.	045	.	055	.	030

1225
1925

Self-Lubricating Guide bush
自润滑导套

1225.

1925.

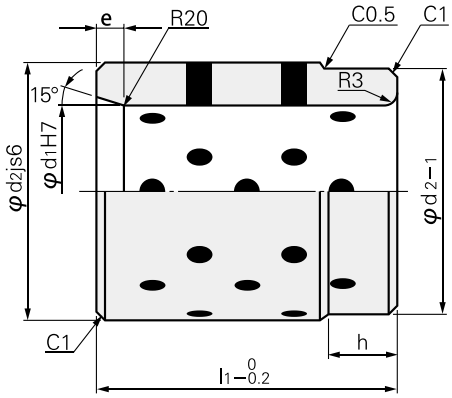

Material 材料：

1225：CuZn25Al5Fe3Mn3+ 固体润滑剂 Solid lubricant

1925：HT250 铸铁 + 固体润滑剂 Solid lubricant

Description 说明：

shaft sleeve can be used in the radial and axial.
轴套可以在径向和轴向使用。

Note 注意：

The inner diameter contracts when pressed.
压入时内径收缩。

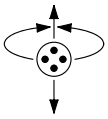

1225./1925. Self-Lubricating Guide bush 1225./1925. 自润滑导套									
d2js6	50	60	70	80	80	100	100	120	120
d1H7	30	40	50	60	60	80	80	100	100
L	50	60	75	60	90	80	120	100	150
h	10	10	15	20	20	25	25	25	25
e	5	5	10	10	10	10	10	10	10

Order 订购

Catalog No. 目录号	.	d_1	.	d_2	.	l_1
1225	.	030	.	050	.	050
1925	.	030	.	050	.	050

1240

With flange, self-lubricating guide bush
带法兰，自润滑导套

1240.

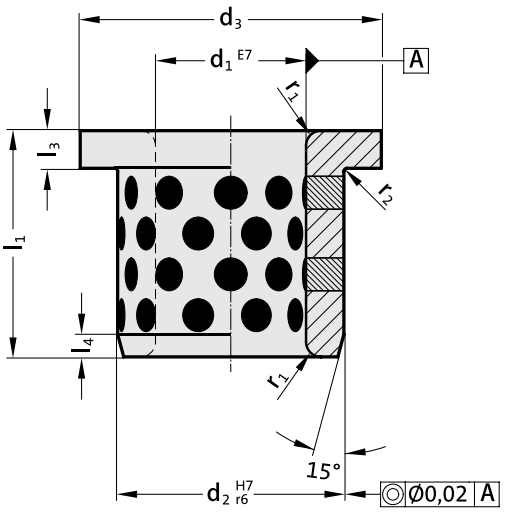

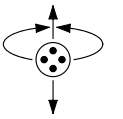

Material 材料:

CuZn25Al5Fe3Mn3+ 固体润滑剂 Solid lubricant

Description 说明:

shaft sleeve can be used in the radial and axial.
轴套可以在径向和轴向使用。

Note 注意:

The inner diameter contracts when pressed.
压入时内径收缩。

1240. With flange, self-lubricating guide bush
1240. 带法兰，自润滑导套

d1	10	12	13	14	15	16	20	25	30	31.5	35	40	45	50	55	60	63	70	75	80	90	100	120
d2	14	18	19	20	21	22	30	35	40	40	45	50	55	60	65	75	75	85	90	100	110	120	140
d3	22	25	26	27	28	29	40	45	50	50	60	65	70	75	80	90	85	105	110	120	130	150	170
l3	2	3	3	3	3	3	5	5	5	5	5	5	5	5	5	7.5	7.5	7.5	7.5	10	10	10	10
l4	2	2	2	2	2	2	3	3	3	3	3	3	3	3	3	4	4	4	4	4	4	4	4
r1	1	1	1	1	1	1	2	2	2	2	2	2	2	2	2	3	3	3	3	3	3	3	3
r2	0.4	0.4	0.4	0.4	0.5	0.5	0.5	0.5	0.5	0.6	0.6	0.6	0.6	0.6	0.7	0.7	0.7	0.7	0.7	0.8	0.8	0.8	0.8
l1																							
15	●	●	●	●	●	●	●	●															
20	●	●	●	●	●	●	●	●	●	●	●	●											
25					●	●	●	●	●														
30					●	●	●	●	●		●	●	●	●									
35									●	●													
40							●	●	●		●	●	●	●	●	●							
50									●		●	●	●	●		●		●					
60													●	●	●				●	●	●		
67.5																	●						
80																●		●		●	●	●	●
100																				●		●	●

Order 订购

Catalog No. 目录号	.	d_1	.	l_1
1240	.	010	.	015

1241

With flange, self-lubricating guide bush
带法兰，自润滑导套

1241.

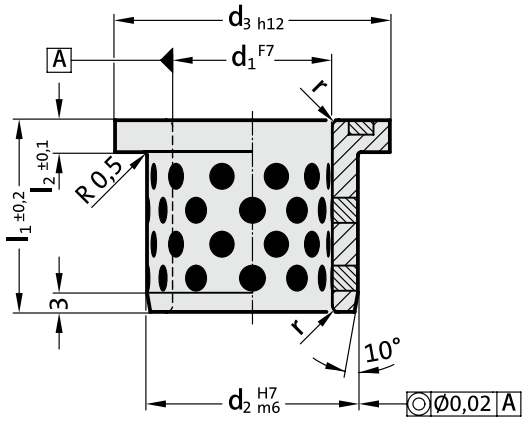

Material 材料：

CuZn25Al5Fe3Mn3+ 固体润滑剂 Solid lubricant

Description 说明：

shaft sleeve can be used in the radial and axial.
轴套可以在径向和轴向使用。

Note 注意：

The inner diameter contracts when pressed.
压入时内径收缩。

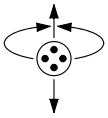

1241. With flange, self-lubricating guide bush 1241. 带法兰，自润滑导套								
d1	12	16	20	25	30	40	50	60
d2	18	22	28	33	38	50	62	75
d3	25	30	36	43	48	60	75	90
r	1	1	1	1	1	2	2	3
l1	15	20	25	30	35	45	55	65
l2	4	5	5	5	5	5	6	7

Order 订购

Catalog No. 目录号	.	d_1	.	l_1
1241	.	020	.	032

1242

With flange, self-lubricating guide bush
带法兰，自润滑导套

1242.

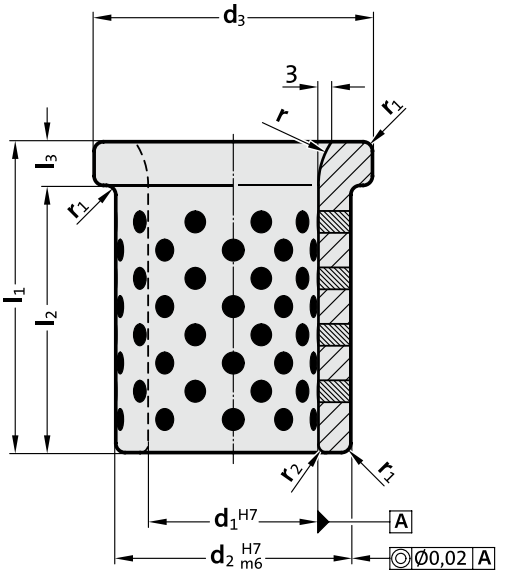

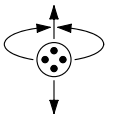

Material 材料:

CuZn25Al5Fe3Mn3+ 固体润滑剂 Solid lubricant

Description 说明:

shaft sleeve can be used in the radial and axial.
轴套可以在径向和轴向使用。

Note 注意:

The inner diameter contracts when pressed.
压入时内径收缩。

1242. With flange, self-lubricating guide bush
1242. 带法兰，自润滑导套

d1	25	30	40	50	60	65	65	80	80	100	100
d2	35	40	55	65	75	80	80	100	100	120	120
d3	45	50	65	75	85	90	90	110	110	130	130
r	10	20	20	20	20	20	20	20	20	20	20
r1	1	1	2	2	0	2	2	2	2	2	2
r2	2	2	2	2	0	2	2	2	2	3	3
l3	7	10	10	10	10	10	10	10	10	10	10
l2	33	40	60	70	70	70	110	9	130	90	130
l1	40	50	70	80	80	80	120	100	140	100	140

Order 订购

Catalog No. 目录号	.	d_1	.	l_1
1242	.	025	.	040

1243

With flange, self-lubricating guide bush, NAAMS
带法兰，自润滑导套，NAAMS

1243.

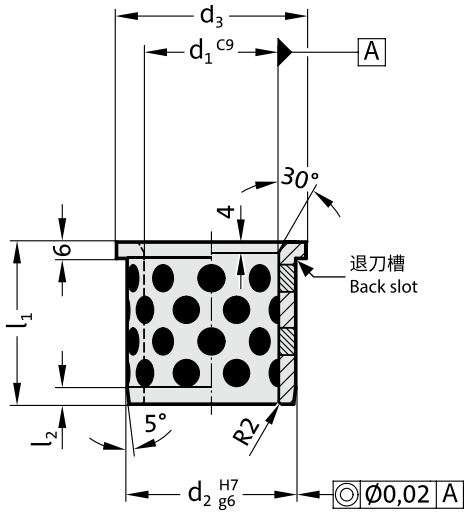

Material 材料：

CuZn25Al5Fe3Mn3+ 固体润滑剂 Solid lubricant

Description 说明：

shaft sleeve can be used in the radial and axial.
轴套可以在径向和轴向使用。

Note 注意：

The inner diameter contracts when pressed.
压入时内径收缩。

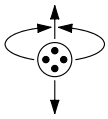

1243. With flange, self-lubricating guide bush, NAAMS 1243. 带法兰，自润滑导套，NAAMS								
d1	25	32	40	50	63	80	100	125
d2	32	40	50	63	80	100	125	160
d3	40	50	63	71	90	112	140	180
l1	40	50	55	63	75	90	115	138
l2	4	4	5	6	8	10	12	12

Order 订购

Catalog No. 目录号	.	d_1	.	l_1
1243	.	025	.	040

1244

With flange, self-lubricating guide bush, CNOMO
带法兰，自润滑导套，CNOMO

1244.

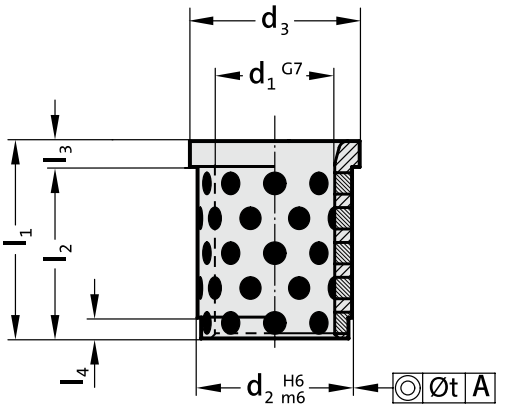

Material 材料：

CuZn25Al5Fe3Mn3+ 固体润滑剂 Solid lubricant

Note 注意：

The guide bush can only be used in axial movement.
The inner diameter contracts when pressed.
该导套只能在轴向运动上使用。
压入时内径收缩。

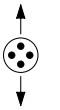

1244. With flange, self-lubricating guide bush, CNOMO 1244. 带法兰，自润滑导套，CNOMO								
d1	20	25	32	40	50	63	80	100
d2	28	35	44	52	63	80	100	125
d3	32	40	50	60	71	90	112	140
l1	32	40	50	63	80	100	125	160
l2	28	35	44	55	70	88	109	140
l3	4	5	6	8	10	12	16	20
l4	3	5	8	8	8	10	10	10
t	0.01	0.01	0.01	0.02	0.02	0.02	0.02	0.02

Order 订购

Catalog No. 目录号	.	d_1	.	l_1
1244	.	020	.	032

1245

With flange, high-force brass guide bush, CNOMO
带法兰，高力黄铜导套，CNOMO

1245.

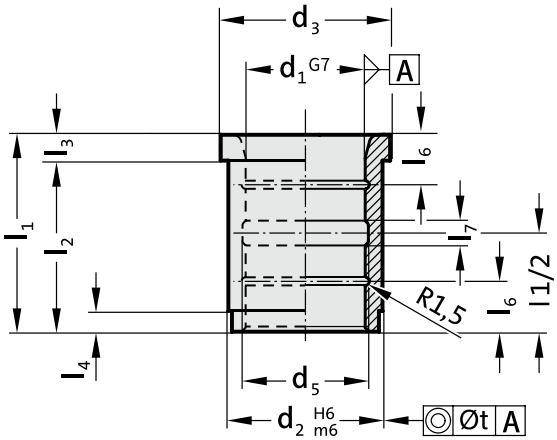

Material 材料：

CuZn25Al5Fe3Mn3

Note 注意：

The guide bush can only be used in axial movement.
The inner diameter contracts when pressed.
该导套只能在轴向运动上使用。
压入时内径收缩。

1245. With flange, high-force brass guide bush, CNOMO 1245. 带法兰，高力黄铜导套，CNOMO								
d1	20	25	32	40	50	63	80	100
d2	28	35	44	52	63	80	100	125
d3	32	40	50	60	71	90	112	140
d5	22	27	34	42	52	65	82	102
l1	32	40	50	63	80	100	125	160
l2	28	35	44	55	70	88	109	140
l3	4	5	6	8	10	12	16	20
l4	3	5	8	8	8	10	10	10
l6	-	-	12	16	20	25	32	40
l7	5	5	5	8	10	12	16	20
t	0.01	0.01	0.01	0.02	0.02	0.02	0.02	0.20

Order 订购

Catalog No. 目录号	.	d_1	.	l_1
1245	.	020	.	032

1250

With flange, self-lubricating guide bush
带法兰，自润滑导套

1250.

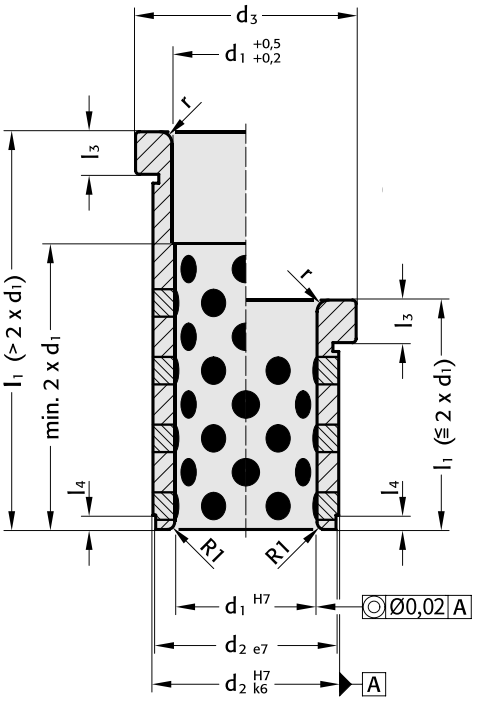

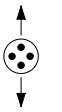

Material 材料：

CuZn25Al5Fe3Mn3+ 固体润滑剂 Solid lubricant

Note 注意：

The inner diameter contracts when pressed.
压入时内径收缩。

1250. With flange, self-lubricating guide bush
1250. 带法兰，自润滑导套

d1	9 10	12	14 15	16	18 20	22 24	25	30 32	40 42	50	60
d2	14	18	20	22	26	30	32	42	54	66	80
d3	16	23	25	27	31	35	38	47	60	72	86
r	0.5	1	1	2	2	3	3	3	3	3	3
l3	3	6	6	6	6	6	6	6	10	10	20
l4	1.5	2	2	2	2	3	4	4	5	5	5
l1											
12	●										
17	●	●	●	●	●	●					
22	●	●	●	●	●	●					
27	●	●	●	●	●	●		●			
36	●	●	●	●	●	●		●			
46	●	●	●	●	●	●	●	●			
56	●	●	●	●	●	●	●	●	●		
66					●	●	●	●	●		
76					●	●	●	●	●	●	
86						●	●	●	●	●	
96						●		●	●	●	●
116								●	●	●	●
136									●	●	●
156									●	●	●
196										●	●

Order 订购

Catalog No. 目录号	.	d_1	.	l_1
1250	.	020	.	017

1260

With flange, inner diameter self-lubricating guide bush, ISO 9448-6
带法兰，内径自润滑导套，ISO 9448-6

1260.

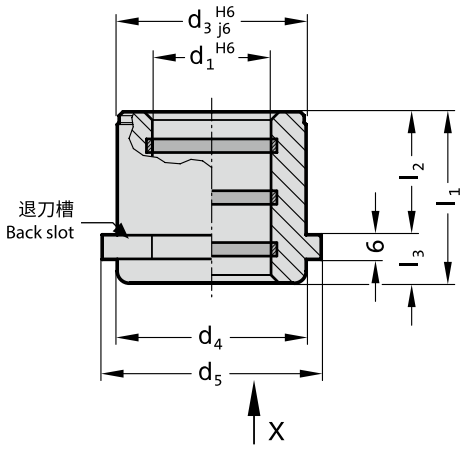

Material 材料：

CuZn25Al5Fe3Mn3+ 内径自润滑环 Self-lubricating ring

Structure 结构：

The working face has a self-lubricating ring.
Bushing can be used axially.
工作面有自润滑环，
轴套可以轴向使用。

Note 注意：

The inner diameter contracts when pressed.
压入时内径收缩。

1260. With flange, inner diameter self-lubricating guide bush, ISO 9448-6
1260. 带法兰，内径自润滑导套，ISO 9448-6

d_1	19 20	24 25	30 32	38 40	48 50	60 63	80
d_3	32	40	48	58	70	85	105
d_4	32	40	48	58	70	85	105
d_5	40	48	56	66	80	95	118
l_1	35	35	42	52	65	80	80
l_2	23	23	30	37	47	60	60
l_3	12	12	12	15	18	20	20

Order 订购

Catalog No. 目录号	.	d_1	.	l_1
1260	.	020	.	035

1261

With flange, self-lubricating guide bush, DIN 9834/IS0 9448
带法兰，自润滑导套，DIN 9834/IS0 9448

1261

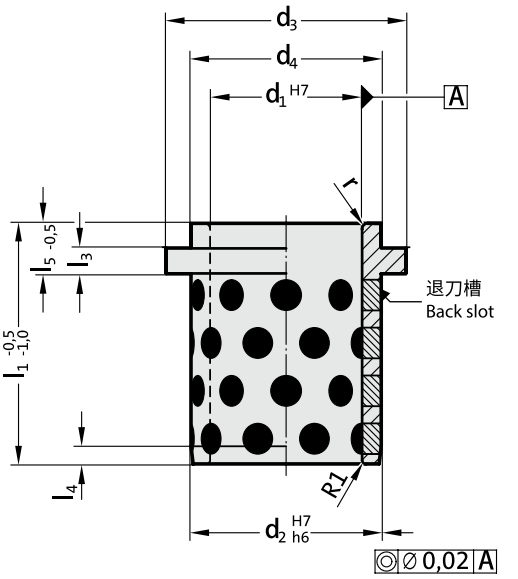

Material 材料：

CuZn25Al5Fe3Mn3+ 固体润滑剂 Solid lubricant

Note 注意：

The guide bush can only be used in axial movement.
该导套只能在轴向运动上使用。

1261. With flange, self-lubricating guide bush, DIN 9834/IS0 9448 1261. 带法兰，自润滑导套，DIN 9834/IS0 9448									
d_1	24 25	30 32	38 40	48 50	60 63	80	100	125	160
d_2	32	40	50	63	80	100	125	160	200
d_3	40	50	63	71	90	112	140	180	220
d_4	32	40	50	63	80	100	125	160	200
l_1	40	50	63	71	80	100	125	160	200
l_3	6.3	6.3	6.3	6.3	10	10	10	10	10
l_4	3	4	5	6.3	8	10	12.5	16	16
l_5	10	12	15	17	19	22	21	30	32
r	3	3	3	5	6	8	10	12	18

Order 订购

Catalog No. 目录号	.	d_1	.	l_1
1261	.	024	.	040

1263

With flange, self-lubricating guide bush, NAAMS
带法兰，自润滑导套， NAAMS

1263.

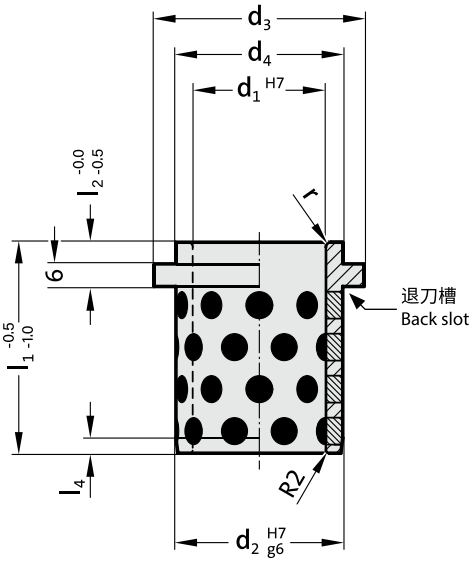

Material 材料：

CuZn25Al5Fe3Mn3+ 固体润滑剂 Solid lubricant

Note 注意：

The guide bush can only be used in axial movement.
该导套只能在轴向运动上使用。

1263. With flange, self-lubricating guide bush, NAAMS 1263. 带法兰，自润滑导套， NAAMS								
d1	25	32	40	50	63	80	100	125
d2	32	40	50	63	80	100	125	160
d3	40	50	63	71	90	112	140	180
d4	32	40	50	63	80	100	125	160
l1	40	50	63	71	80	100	125	160
l2	10	10	13	15	17	20	19	28
l4	4	4	5	6	8	10	12	12
r	3	3	3	5	6	8	10	12

Order 订购

Catalog No. 目录号	.	d_1	.	l_1
1263	.	025	.	040

1264

With flange, self-lubricating guide bush, NAAMS
带法兰，自润滑导套， NAAMS

1264.

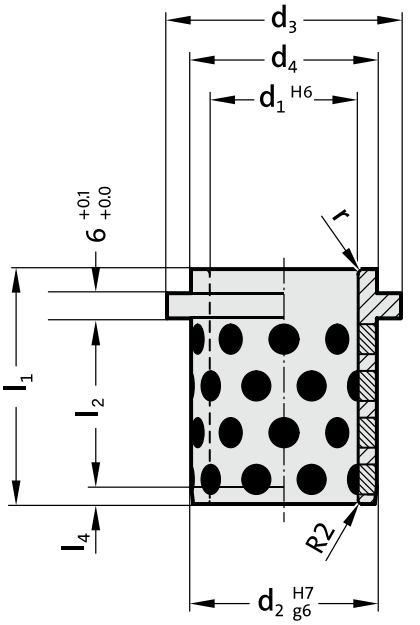

Material 材料:

CuZn25Al5Fe3Mn3+ 固体润滑剂 Solid lubricant

Note 注意:

The guide bush can only be used in axial movement.
该导套只能在轴向运动上使用。

1264. With flange, self-lubricating guide bush, NAAMS 1264. 带法兰，自润滑导套， NAAMS									
d1	25	32	40	50	63	80	100	115	125
d2	32	40	50	63	80	100	125	140	160
d3	40	50	63	71	90	112	140	155	180
d4	32	40	50	63	80	100	125	140	160
l1	40	50	63	71	80	100	125	140	160
l2	30	40	50	56	63	80	106	120	132
l4	4	4	5	6	8	10	12	12	12
r	3	3	3	5	6	8	10	10	12

Order 订购

Catalog No. 目录号	.	d_1	.	l_1
1264	.	025	.	040

1272

With flange, self-lubricating bushing
带法兰，自润滑轴套

1272.

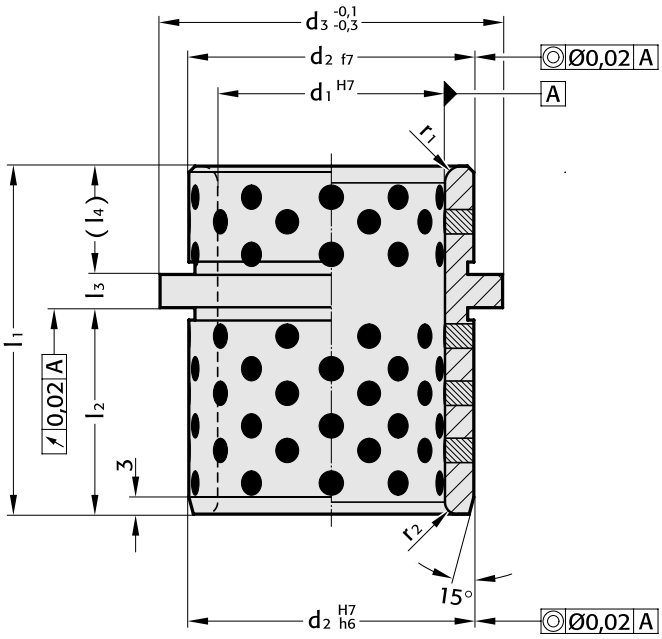

Material 材料：

CuZn25Al5Fe3Mn3+ 固体润滑剂 Solid lubricant

Note 注意：

The inner diameter contracts when pressed.
压入时内径收缩。

1272. With flange, self-lubricating bushing 1272. 带法兰，自润滑轴套										
d1	25	30	40	40	50	50	60	63	63	63
d2	35	42	50	50	63	63	80	80	80	80
d3	40	47	60	60	72	72	86	90	90	90
r1	3	3	4	4	4	4	3	4	4	4
r2	2	2	2	2	3	3	3	3	3	3
l1	43	43	60	64	77	92.	78	95	100	108
l2	24	24	35.5	39.5	44.5	55.5	49	55.5	62.5	62.5
l3	7.5	7.5	6	6	8	8	7.5	8	8	8
l4	11.5	11.5	18.5	18.5	24.5	28.5	21.5	31.5	29.5	37.5

Order 订购

Catalog No. 目录号	.	d_1	.	l_1
1272	.	025	.	043

2210

With oil groove, guide plate
带油槽，导板

Material 材料:
高力黄铜 CuZn25Al5Fe3Mn3

2210

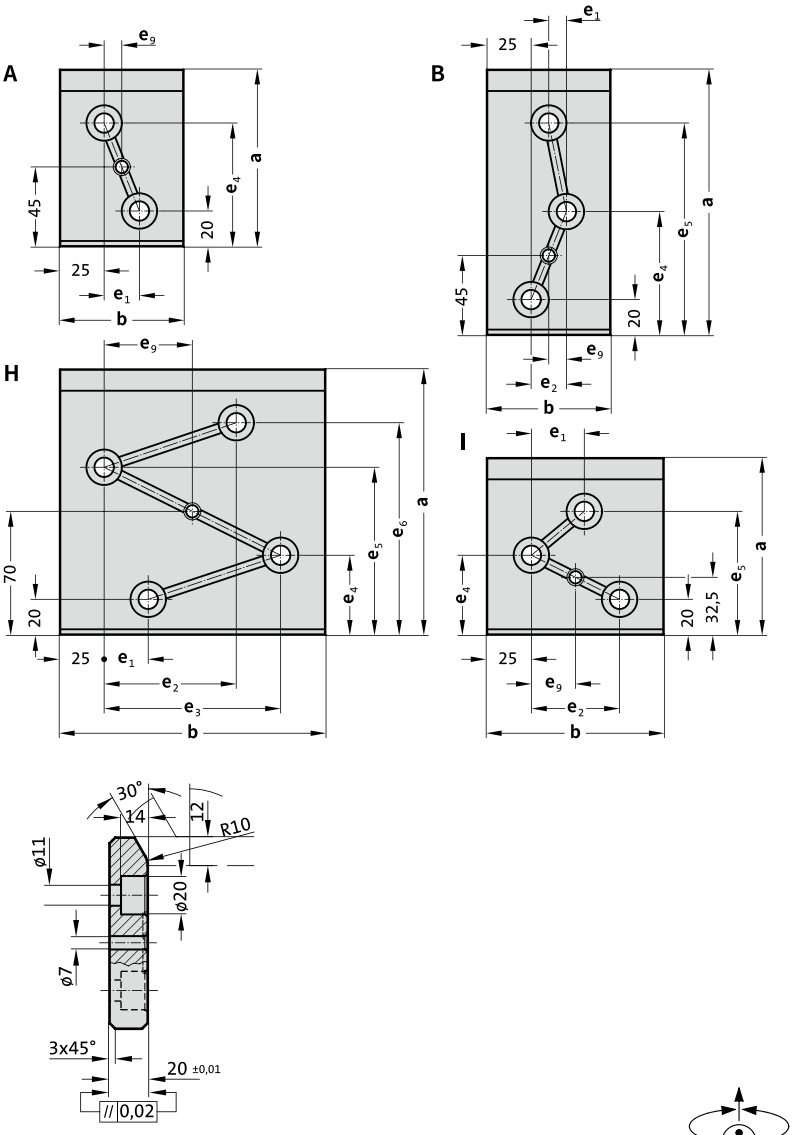

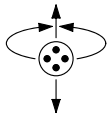

2210. With oil groove, guide plate
2210. 带油槽，导板

形状	b	a	e_1	e_2	e_3	e_4	e_5	e_6	e_9	螺栓孔数量
A	70	100	20	-	-	70	-	-	10	2
B	70	150	10	20	-	70	120	-	10	3
I	100	100	30	50	-	45	70	-	25	3
H	150	150	25	75	100	45	95	120	50	4

Order 订购 Catalog No. 目录号 . b . a . 厚度
2210 . 070 . 100 . 020

2211

Self-lubricating guide plate, ISO 9183-1
自润滑导板，ISO 9183-1

2211

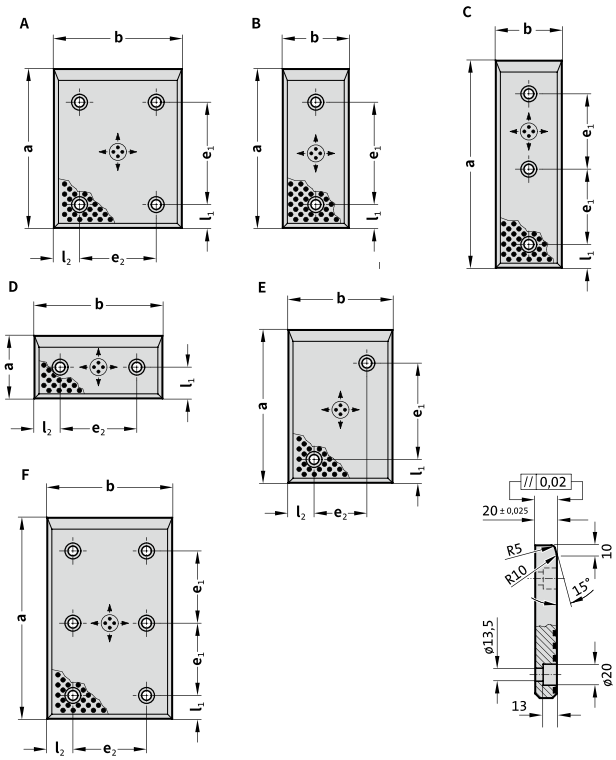

Material 材料：

CuZn25Al5Fe3Mn3 + 固体润滑剂 Solid lubricant

2211. Self-lubricating guide plate, ISO 9183-1 2211. 自润导板，ISO 9183-1						
形状	b	a	l_1	e_1	l_2	e_2
B	50	80	20	35	25	-
B	50	100	20	55	25	-
B	50	125	20	80	25	-
B	50	160	20	115	25	-
B	50	200	20	155	25	-
C	50	250	20	100	25	-
D	80	50	25	-	20	40
E	80	80	20	35	20	40
E	80	100	20	55	20	40
E	80	125	20	80	20	40
A	80	160	20	115	20	40
A	80	200	20	155	20	40
F	80	250	20	100	20	40
F	80	315	20	132	20	40
D	100	50	25	-	20	60
E	100	80	20	35	20	60
E	100	100	20	55	20	60
A	100	125	20	80	20	60
A	100	160	20	115	20	60

2211. Self-lubricating guide plate, ISO 9183-1 2211. 自润导板，ISO 9183-1						
形状	b	a	l_1	e_1	l_2	e_2
A	100	200	20	155	20	60
F	100	250	20	100	20	60
F	100	315	20	132	20	60
D	125	50	25	-	20	85
E	125	80	20	35	20	85
A	125	100	20	55	20	85
A	125	125	20	80	20	85
A	125	160	20	115	20	85
A	125	200	20	155	20	85
F	125	250	20	100	20	85
F	125	315	20	132	20	85
D	160	50	25	-	20	120
A	160	80	20	35	20	120
A	160	100	20	55	20	120
A	160	125	20	80	20	120
A	160	160	20	115	20	120
A	160	200	20	155	20	120
F	160	250	20	100	20	120
F	160	315	20	132	20	120

Order 订购

Catalog No. 目录号	.	b	.	a	.	厚度
2211	.	050	.	080	.	020

2212
2511

Guide plate, VDI 3357
导板，VDI 3357

2212

2511

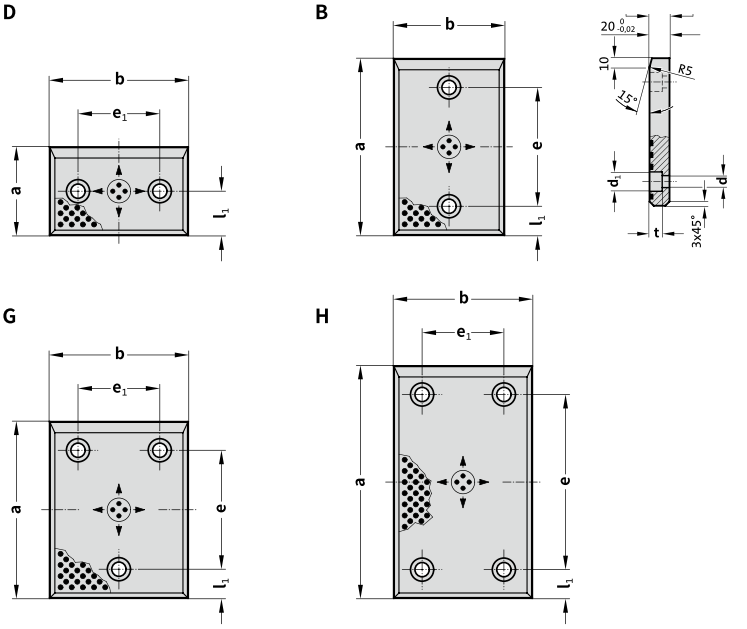

Material 材料：

2212：CuZn25Al5Fe3Mn3 + 固体润滑剂 Solid lubricant
2511：钢 steel

Description 说明：

2511：表面高频处理 Surface high frequency processing

硬度 hardness：
2212：≥210HB
2511：55~60HRC

2212. /2511. Guide plate, VDI 3357
2212. /2511. 导板，VDI 3357

形状	b	a	l1	e	e1	d	d1	t	螺栓孔数量
B	50	80	25	30	-	9	15	9	2
B	50	100	25	50	-	13.5	20	13	2
B	50	125	25	75	-	13.5	20	13	2
B	50	160	25	110	-	13.5	20	13	2
B	50	200	25	150	-	13..5	20	13	2
D	80	50	25	-	30	9	15	9	2
B	80	80	25	30	-	13.5	20	13	2
B	80	100	25	50	-	13.5	20	13	2
B	80	125	25	75	-	13.5	20	13	2
B	80	160	25	110	-	13.5	20	13	2
B	80	200	25	150	-	13.5	20	13	2
B	80	250	40	170	-	13.5	20	13	2
B	80	315	40	235	-	13.5	20	13	2
D	100	50	25	-	50	13.5	20	13	2
D	100	80	40	-	50	13.5	20	13	2
B	100	100	25	50	-	13.5	20	13	2
B	100	125	25	75	-	13.5	20	13	2
B	100	160	25	110	-	13.5	20	13	2
B	100	200	25	150	-	13.5	20	13	2

2212. /2511. Guide plate, VDI 3357
2212. /2511. 导板，VDI 3357

形状	b	a	l1	e	e1	d	d1	t	螺栓孔数量
B	100	250	40	170	-	13.5	20	13	2
B	100	315	40	235	-	13.5	20	13	2
D	125	50	25	-	75	13.5	20	13	2
D	125	80	40	-	75	13.5	20	13	2
G	125	100	25	50	75	13.5	20	13	3
G	125	125	25	75	75	13.5	20	13	3
G	125	160	25	110	75	13.5	202	13	3
G	125	200	25	150	75	13.5	20	13	3
G	125	250	40	170	75	13.5	20	13	3
G	125	315	40	235	75	13.5	20	13	3
D	160	50	25	-	110	13.5	20	13	3
D	160	80	40	-	110	13.5	20	13	3
G	160	100	25	50	110	13.5	20	13	3
G	160	125	25	75	110	13.5	20	13	3
G	160	160	25	110	110	13.5	20	13	3
G	160	200	25	150	110	13.5	20	13	3
H	160	250	40	170	110	13.5	20	13	4
H	160	315	40	235	110	13.5	20	13	4

Order 订购

Catalog No. 目录号	.	b	.	a	.	厚度
2212	.	050	.	080	.	020
2511	.	050	.	080	.	020

2213

Self-lubricating guide plate, AFNOR/ISO 9183-2
自润滑导板， AFNOR/ISO 9183-2

Material 材料：

CuZn25Al5Fe3Mn3 + 固体润滑剂 Solid lubricant

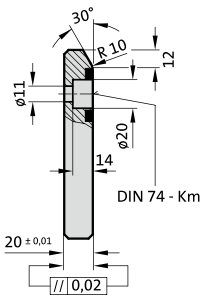

2213.

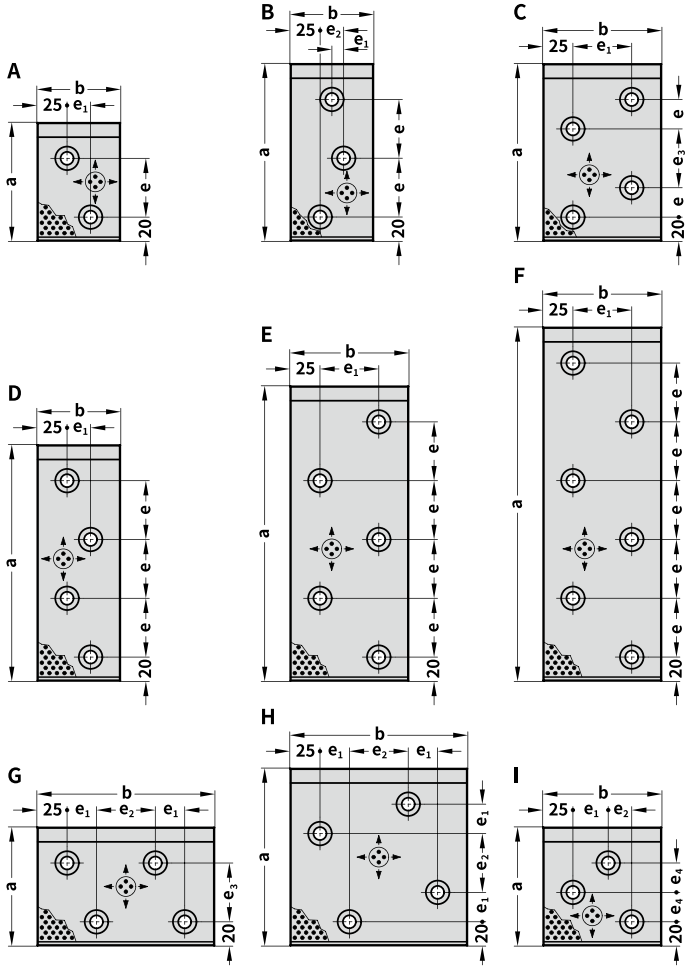

2213. Self-lubricating guide plate, AFNOR/ISO 9183-2 2213. 自润滑导板， AFNOR/ISO 9183-2								
形状	b	a	e	e_1	e_2	e_3	e_4	螺栓孔数量
A	70	100	50	20	-	-	-	2
B	70	150	50	10	20	-	-	3
D	70	200	50	20	-	-	-	4
I	100	100	-	30	20	-	25	3
C	100	150	25	50	-	50	-	4
D	100	200	50	50	-	-	-	4
E	100	250	50	50	-	-	-	5
F	100	300	50	50	-	-	-	6
G	150	100	-	25	50	50	-	4
H	150	150	-	25	50	-	-	4
D	150	200	50	100	-	-	-	4
E	150	250	50	100	-	-	-	5
F	150	300	50	100	-	-	-	6
G	200	100	-	50	50	50	-	4

Order 订购

Catalog No. 目录号	.	b	.	a	.	厚度
2213		070		100		020

2214
2214.1
2914

Self-lubricating guide plate, Japanese standard
自润滑导板，日本标准

2214

2214.1

2914

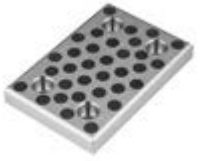

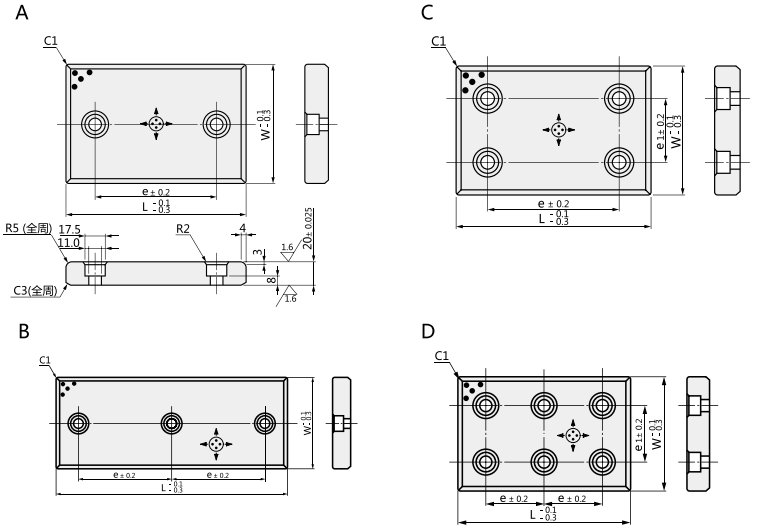

Material 材料：

CuZn25Al5Fe3Mn3 + 固体润滑剂 Solid lubricant
2914: HT250 铸铁 + 固体润滑剂 Solid lubricant

2214./2214.1/2914. Self-lubricating guide plate, Japanese standard
2214./2214.1/2914. 自润滑导板，日本标准

e	Catalog No.	W	NO.(L)	形状
45	2214	28	75	A
50			100	A
75			120	A
100			150	A
150			200	A
200			250	A
125			300	B
45		38	75	A
50			100	A
75			125	A
100			150	A
150			200	A
200			250	A
125			300	B
45		48	75	A
50			100	A
75			150	A
100			150	A
150			200	A
200			250	A
125			300	B
45		58	75	A
50			100	A
75			125	A
100			150	A
150			200	A
200			250	A
125			300	B
25		75	75	A
50			100	A
75			125	A
100			150	A
150			200	A
200			250	A
100			300	B
125			300-H	B

2214./2214.1/2914. Self-lubricating guide plate, Japanese standard
2214./2214.1/2914. 自润滑导板，日本标准

e	e1	Catalog No.	W	NO.(L)	形状
50	50	2214	100	100	C
75				125	C
100				150	C
150				200	C
200				250	C
200	50			300	C
125				300-H	D
75				125	C
100				150	C
150				200	C
200				250	C
200			125	300	C
200				350	C
75	75			125-H	C
100				150-H	C
150				200-H	C
200				250-H	C
125				300-H	D
200				350-H	C
100	100		150	150	C
150				200	C
200				250	C
250				300	C
125				300-H	D
150	150		200	200	C
200				250	C
250				300	C
125				300-H	D
50		2214.1	100	100	A
75				125	A
100				150	A
150				200	A
200				250	A
200				300	A
75			125	125	A
100				150	A
150				200	A
200				250	A
200				300	A
100			150	150	A
150				200	A
200				250	A
250				300	A

Order 订购

Catalog No. 目录号	.	W	.	L	.	厚度
2214		028		075		020
2214.1		100		100		020
2914		028		075		020

2215

Self-lubricating guide plate, VDI 3357, VDI 3357
自润滑导板， VDI 3357

2215.

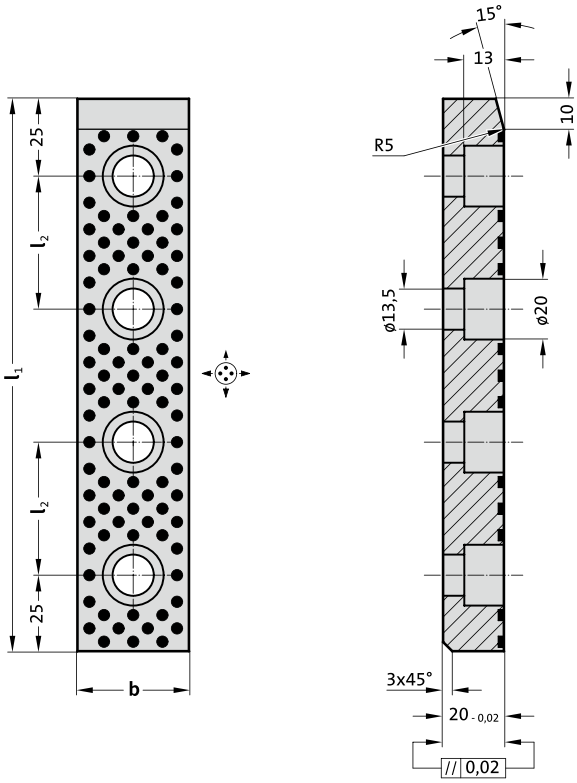

Material 材料:

CuZn25Al5Fe3Mn3 + 固体润滑剂 Solid lubricant

2215. Self-lubricating guide plate, VDI 3357, VDI 3357 2215. 自润滑导板， VDI 3357		
b	l1	l2
50	250	60
50	300	80
50	350	100
50	400	120
50	450	140
50	500	150
80	250	60
80	300	80
80	350	100
80	400	120
80	450	140
80	500	150
100	250	60
100	300	80
100	350	100

2215. Self-lubricating guide plate, VDI 3357, VDI 3357 2215. 自润滑导板， VDI 3357		
100	400	120
100	450	140
100	500	150
125	250	60
125	300	50
125	250	100
125	400	120
125	450	140
125	500	150
160	250	60
160	300	80
160	350	100
160	400	120
160	450	140
160	500	150

Order 订购

Catalog No. 目录号	.	b	.	l_1	.	厚度
2215	.	050	.	250	.	020

2225
2225.1

Self-lubricating guide plate, Japanese standard
自润滑导板，日本标准

2225

2225.1

A

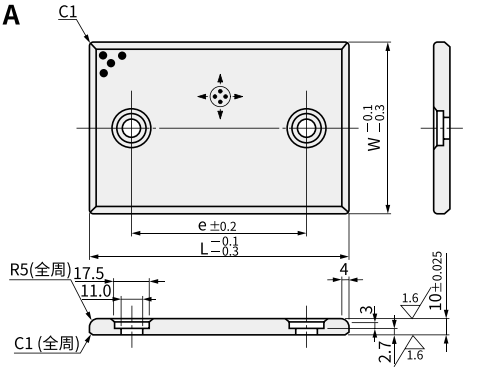

※W＝28、38的纵向R为R2。

W＝28、38时仅纵向(L方向)。

B

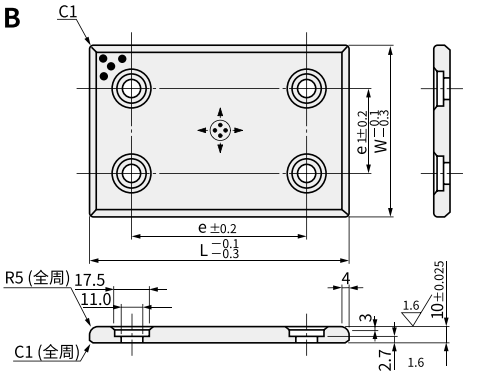

Material 材料：

CuZn25Al5Fe3Mn3 + 固体润滑剂 Solid lubricant

2225. /2215.1 Self-lubricating guide plate, Japanese standard
2225. /2215.1 自润滑导板，日本标准

e	CatalogNo.	W	L	形状
45	2225	28	75	A
50			100	A
75			125	A
100			150	A
45		38	75	A
50			100	A
75			125	A
100			150	A
45		48	15	A
50			100	A
75			125	A
100			150	A
150			200	A
45		58	75	A
50			100	A
75			125	A
100			150	A
150			200	A
25		75	75	A
50			100	A
75			125	A
100			150	A
125			175	A
150			200	A

2225. /2215.1 Self-lubricating guide plate, Japanese standard
2225. /2215.1 自润滑导板，日本标准

e	e1	CatalogNo.	W	L	形状
50	50	2225	100	100	B
75				125	B
100				150	B
150				200	B
200				250	B
100	50		125	150	B
150				200	B
200				250	B
100	100		150	150	B
150				200	B
50	-	2225.1	100	100	A
75				125	A
100				150	A
150				200	A
200				250	A
100			125	150	A
150				200	A
200				250	A
100			150	150	A
150				200	A

Order 订购

Catalog No. 目录号	.	W	.	L	.	厚度
2225 2225.1		028 100		075 100		020 020

2220
2520

Guides plate, VDI 3357
导板，VDI 3357

2220

2520

A

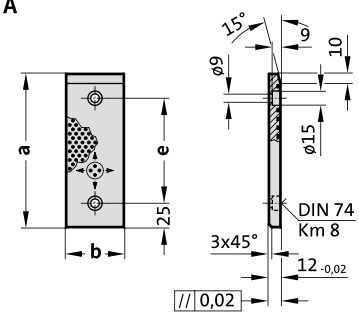

B

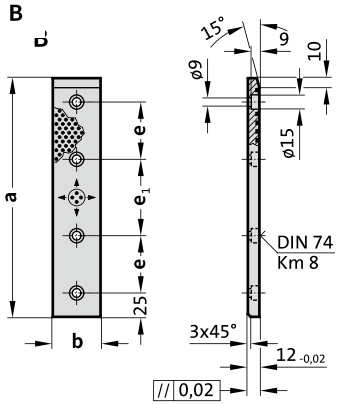

Material 材料：

2220：CuZn25Al5Fe3Mn3 + 固体润滑剂 Solid lubricant

2520：钢 Steel

2520：55~60HRC

Description 说明：

2511：表面高频处理 Surface high frequency processing

硬度 Hardness：

2220：≥210HB

2520：55~60HRC

2220. Guides plate, VDI 3357
2220. 导板 , VDI 3357

形状	b	a	e	e_1	螺栓孔数量
A	30	80	30	-	2
A	30	100	50	-	2
A	30	125	75	-	2
A	30	160	110	-	2
A	30	200	150	-	2
A	30	225	175	-	2
B	30	250	60	80	4
B	30	260	60	90	4
B	30	280	60	110	4
B	30	300	80	90	4
B	30	320	80	110	4
A	40	80	30	-	2
A	40	100	50	-	2
A	40	125	75	-	2
A	40	160	110	-	2
A	40	200	150	-	2
A	40	200	150	-	2
A	50	80	30	-	2
A	50	100	50	-	2
A	50	125	75	-	2
A	50	160	110	-	2
A	50	200	150	-	2
A	50	225	175	-	2
B	50	250	60	80	4
B	50	300	80	90	4

2220. Guides plate, VDI 3357
2220. 导板 , VDI 3357

形状	b	a	e	e_1	螺栓孔数量
B	50	350	100	100	4
B	50	400	120	110	4
A	60	80	30	-	2
A	60	100	50	-	2
A	60	125	75	-	2
A	60	160	110	-	2
A	60	200	150	-	2
A	60	225	175	-	2
B	60	240	60	70	4
B	60	250	60	80	4
B	60	260	60	90	4
B	60	280	60	110	4
A	80	80	30	-	2
A	80	100	50	-	2
A	80	125	75	-	2
A	80	160	110	-	2
A	80	200	150	-	2
A	80	225	175	-	2
B	80	240	60	70	4
B	80	250	60	80	4
B	80	260	60	90	4
B	80	280	60	110	4
B	100	240	60	70	4
B	100	260	60	90	4
B	100	280	60	110	4

Order 订购

Catalog No. 目录号	.	b	.	a	.	厚度
2220	.	030	.	080	.	012
2520		030		080		012
	.		.		.	

2221

Self-lubricating guide plate
自润滑导板

Material 材料:

CuZn25Al5Fe3Mn3 + 固体润滑剂 Solid lubricant

2221.

A

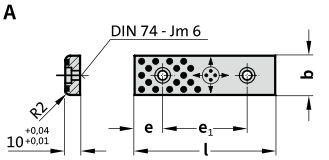

F

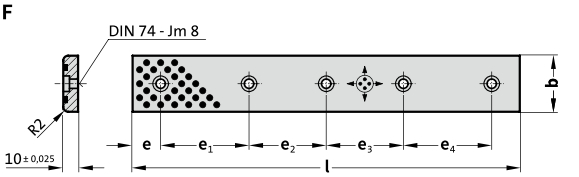

E

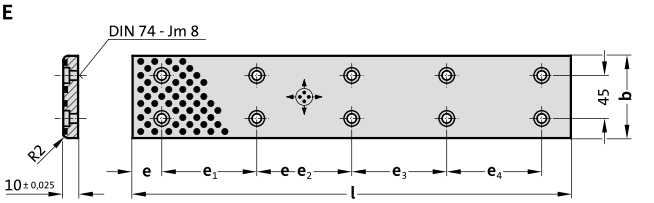

2221. Self-lubricating guide plate 2221. 自润滑导板								
形状	b	l	e	e_1	e_2	e_3	e_4	螺栓孔数量
A	18	75	15	45	-	-	-	2
A	18	100	25	50	-	-	-	2
A	18	125	25	75	-	-	-	2
A	18	150	25	100	-	-	-	2
A	28	75	15	45	-	-	-	2
A	28	10	25	50	-	-	-	2
A	28	125	25	75	-	-	-	2
A	28	150	25	100	-	-	-	2
F	35	100	20	60	-	-	-	2
F	35	150	20	55	55	-	-	3
F	35	200	20	55	50	55	-	4
F	35	250	20	70	70	70	-	4
F	35	300	20	65	65	65	65	5
F	35	350	20	80	75	75	80	5
A	38	75	15	45	-	-	-	2
A	38	100	25	50	-	-	-	2
A	38	125	25	75	-	-	-	2
A	38	150	25	100	-	-	-	2

2221. Self-lubricating guide plate 2221. 自润滑导板								
形状	b	l	e	e_1	e_2	e_3	e_4	螺栓孔数量
A	48	75	15	45	-	-	-	2
A	48	100	25	50	-	-	-	2
A	48	125	25	75	-	-	-	2
A	48	150	25	100	-	-	-	2
F	50	100	20	60	-	-	-	2
F	50	200	20	55	50	55	-	4
F	50	250	20	70	70	70	-	4
F	50	300	20	65	65	65	65	5
F	50	350	20	80	75	75	80	5
F	50	400	20	90	90	90	90	5
E	75	150	20	110	-	-	-	4
E	75	200	20	80	80	-	-	6
E	75	250	20	105	105	-	-	6
E	75	300	20	85	90	85	-	8
E	75	400	20	120	120	120	-	8
E	75	500	20	115	115	115	115	10

Order 订购

Catalog No. 目录号	.	b	.	l	.	厚度
2221	.	018	.	075	.	010

2226
2526

Wedge self-lubricating guide plate
斜楔自润滑导板

2226

2526

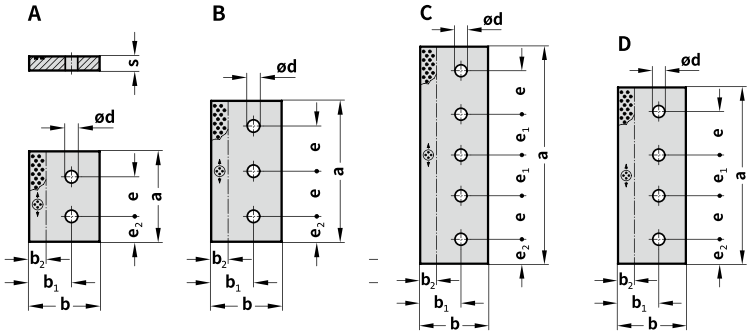

Material 材料：

2226：CuZn25Al5Fe3Mn3 + 固体润滑剂 Solid lubricant

2526：钢 Steel+ 固体润滑剂 Solid lubricant

Description 说明：

2526：表面高频处理 Surface high frequency processing

硬度 Hardness：

2226：≥210HB

2526：55~60HRC

2226. /2526. Wedge self-lubricating guide plate
2226. /2536. 斜楔自润滑导板

形状	b	s	a	b2	b1	d	e	e_1	e_2	螺栓孔数量
A	35	10	160	10	20	11	70	-	45	2
A	35	10	200	10	20	11	110	-	45	2
B	35	10	250	10	20	11	80	-	45	3
A	45	10	160	15	30	13.5	70	-	45	2
A	45	15	200	15	30	13.5	110	-	45	2
B	45	15	250	15	30	13.5	80	-	45	3
A	55	15	160	20	35	17.5	70	-	45	2
A	55	15	200	20	35	17.5	110	-	45	2
B	55	15	250	20	35	17.5	80	-	45	3
A	75	25	160	25	40	17.5	70	-	45	2
A	75	25	200	25	40	17.5	110	-	45	2
B	75	25	250	25	40	17.5	80	-	45	3
B	85	28	240	30	60	22	95	-	25	3
D	85	28	300	30	60	22	85	80	25	4
D	85	28	350	30	60	22	100	100	25	4
D	85	28	400	30	60	22	115	120	25	4
C	85	28	450	30	60	22	100	100	25	5
A	85	30	160	30	60	22	70	-	45	2
A	85	30	200	30	60	22	110	-	45	2
B	85	30	250	30	60	22	80	-	45	3
B	85	30	300	30	60	22	105	-	45	3
B	85	30	350	30	60	22	130	-	45	3
C	85	30	400	30	60	22	80	75	45	5
A	100	25	160	30	60	17.5	70	-	45	2

2226. /2526. Wedge self-lubricating guide plate
2226. /2536. 斜楔自润滑导板

形状	b	s	a	b2	b1	d	e	e_1	e_2	螺栓孔数量
A	100	25	200	30	60	17.5	110	-	45	2
B	100	25	250	30	60	17.5	80	-	45	3
C	100	25	400	30	60	17.5	80	75	45	5
A	100	30	160	30	60	22	70	-	45	2
A	100	30	200	30	60	22	110	-	45	2
B	100	30	250	30	60	22	80	-	45	3
C	100	30	400	30	60	22	80	75	45	5
A	125	25	160	30	75	17.5	70	-	45	2
A	125	25	200	30	75	17.5	110	-	45	2
B	125	25	250	30	75	17.5	80	-	45	3
D	125	25	300	30	80	26	85	80	25	4
D	125	25	350	30	80	26	100	100	25	4
D	125	25	400	30	80	26	115	120	25	4
C	125	25	400	30	75	17.5	80	75	45	5
C	125	25	450	30	80	26	100	100	25	5
C	125	25	500	30	80	26	110	115	25	5
A	125	30	160	30	75	22	70	-	45	2
A	125	30	200	30	75	22	110	-	45	2
B	125	30	250	30	75	22	80	-	45	3
B	125	30	300	30	75	22	105	-	45	3
B	125	30	350	30	75	22	130	-	45	3
C	125	30	400	30	75	22	80	75	45	5
C	125	30	450	30	75	22	80	95	50	5
C	125	30	500	30	75	22	80	120	50	5

Order 订购

Catalog No. 目录号	.	b	.	a	.	s
2226	.	035	.	160	.	010
2526	.	035	.	160	.	010

2232

Self-lubricating guide plate without fixing hole
无固定孔自润滑导板

2232.

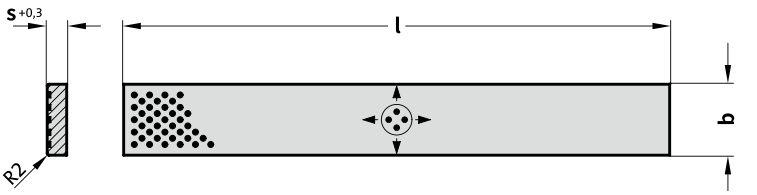

Material 材料:

CuZn25Al5Fe3Mn3 + 固体润滑剂 Solid lubricant

2232. Self-lubricating guide plate without fixing hole
2232. 无固定孔自润滑导板

b	s	l	l	l
		305	605	1005
20	4	●		
25	5	●		
30	4	●		
30	6	●	●	
30	8	●	●	
30	10	●	●	●
30	12	●	●	●
35	10	●	●	
40	5	●	●	
40	6	●	●	●
40	8	●	●	●
40	10	●	●	●
40	12		●	●
40	16		●	●
50	10	●	●	●
50	12		●	●
50	20		●	●
60	12		●	●
60	16		●	●
80	10	●	●	●
80	12		●	●
80	16		●	●
80	20		●	●
80	25		●	●
100	16		●	●
100	20		●	●
100	25		●	●
125	20		●	●
125	25		●	●
160	25		●	●

Order 订购

Catalog No. 目录号	.	b	.	s	.	l
2232	.	020	.	0305	.	004

2243

Side self-lubricating guide plate
侧面自润滑导板

Material 材料:
CuZn25Al5Fe3Mn3 + 固体润滑剂 Solid lubricant

2243.

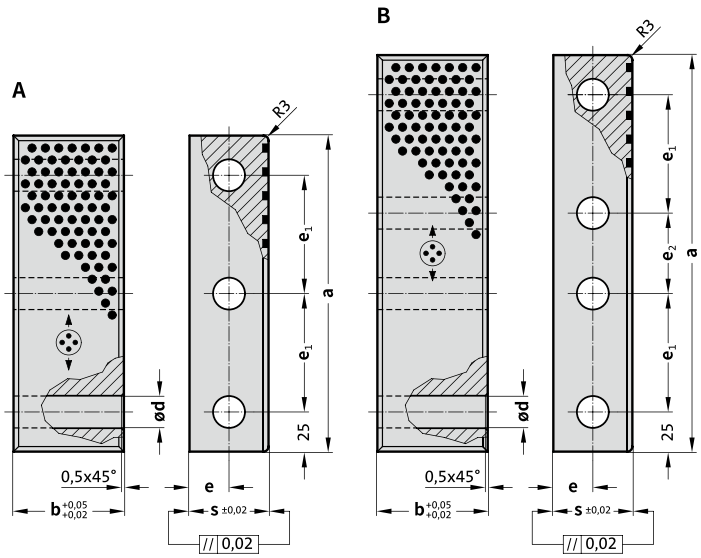

2243. Side self-lubricating guide plate
2243. 侧面自润滑导板

形状	b	a	s	e	e1	e2	d	螺栓孔数量
A	30	150	40	20	50	-	14	3
A	30	200	40	20	75	-	14	3
B	30	250	40	20	75	50	14	4
A	40	150	40	20	50	-	14	3
A	40	200	40	20	75	-	14	3
B	40	250	40	20	75	50	14	4
A	45	150	50	25	50	-	18	3
A	45	200	50	25	75	-	18	3
B	45	250	50	25	75	50	18	4
A	5	150	50	25	50	-	18	3
A	5	200	50	25	75	-	18	3
B	5	250	50	25	75	50	18	4
A	60	150	50	25	50	-	18	3
A	60	200	50	25	75	-	18	3
B	60	250	50	25	75	50	18	4
A	70	150	50	25	50	-	18	3
A	70	200	50	25	75	-	18	3
B	70	250	50	25	75	50	18	4

Order 订购

Catalog No. 目录号	.	b	.	a	.	s
2243	.	030	.	150	.	040

2244

Three-sided self-lubricating guide plate
三面自润滑导板

2244.

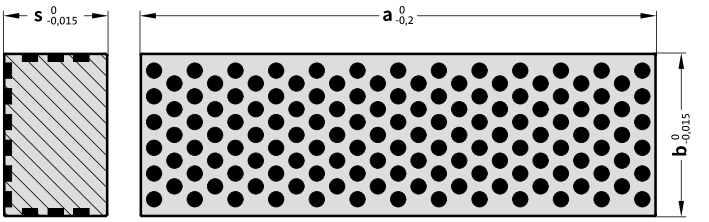

Material 材料:

CuZn25Al5Fe3Mn3 + 固体润滑剂 Solid lubricant

2244. Three-sided self-lubricating guide plate 2244. 三面自润滑导板		
b	a	s
25	80	16
25	100	16
25	125	16
40	125	25
40	160	25
40	200	25
63	200	40
63	250	40
63	315	40

Order 订购

Catalog No. 目录号	.	b	.	a	.	s
2244	.	025	.	080	.	016

2245

Two sides, self-lubricating guide plate
两侧面，自润滑导板

2245.

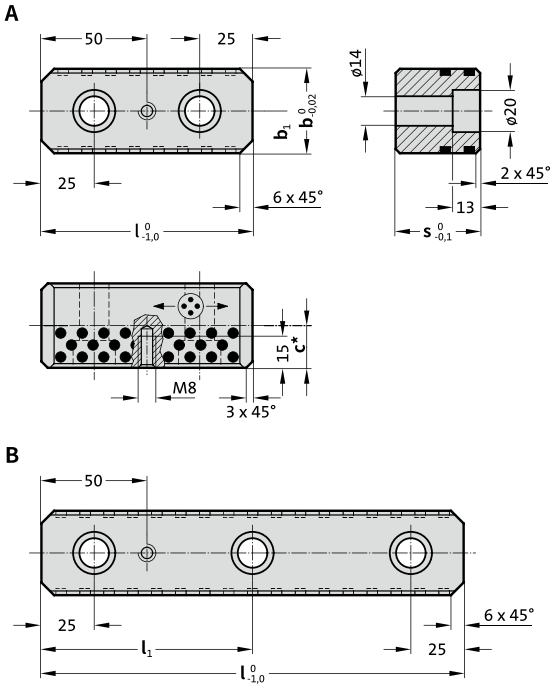

Material 材料：

CuZn25Al5Fe3Mn3 + 固体润滑剂 Solid lubricant

2245. Two sides, self-lubricating guide plate
2245. 两侧面，自润滑导板

形状	b	l	s	b1	l1	c*	螺栓孔数量
A	30	100	30	15	-	18	2
A	30	150	30	15	-	18	2
B	30	200	30	15	100	18	3
B	30	150	30	15	125	18	3
B	30	300	30	15	150	18	3
B	30	350	30	15	175	18	3
A	40	100	30	20	-	18	2
A	40	150	30	20	-	18	2
B	40	200	30	20	100	18	3
B	40	250	30	20	125	18	3
B	40	300	30	20	150	18	3
B	40	350	30	20	175	18	3
A	40	100	40	20	-	20	2
A	40	150	40	20	-	20	2
B	40	200	40	20	100	20	3
B	40	250	40	20	125	20	3
B	40	300	40	20	150	20	3
B	40	350	40	20	175	20	3

Inlaid solid lubricant area 镶嵌固态润滑剂区域

Order 订购

Catalog No. 目录号	.	b	.	l	.	s
2245	.	030	.	100	.	030

2260

L type self-lubricating guide plate
L 型自润滑导板

2260.

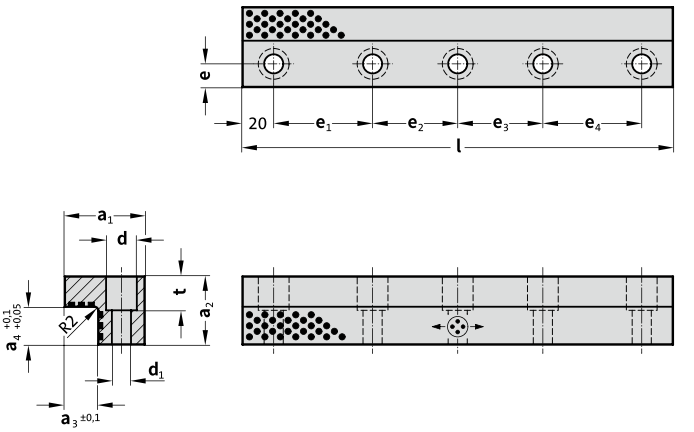

Material 材料：

CuZn25Al5Fe3Mn3 + 固体润滑剂 Solid lubricant

2260. L type self-lubricating guide plate
2260. L 型自润滑导板

a_1	l	a_2	a_3	a_4	e	e_1	e_2	e_3	e_4	d	d1	t	螺栓孔数量
26	100	20	8	10	9	60	-	-	-	15	9	9.6	2
26	150	20	8	10	9	55	55	-	-	15	9	9.9	3
26	200	20	8	10	9	55	50	55	-	15	9	9.6	4
32	100	30	10	15	11	60	-	-	-	-	11	-	2
32	150	30	10	15	11	55	55	-	-	-	11	-	3
32	200	30	10	15	11	55	50	55	-	-	11	-	4
32	250	30	10	15	11	70	70	70	-	-	11	-	4
50	200	45	22	25	14	55	50	55	-	18	11	25	4
50	250	45	22	25	14	70	70	70	-	18	11	25	4
50	300	45	22	25	14	65	65	65	65	18	11	25	5
50	350	45	22	25	14	80	75	75	80	18	11	25	5

Order 订购

Catalog No. 目录号	.	a_1	.	l	.	a_2
2260	.	026	.	100	.	020

2263

L type self-lubricating guide plate
L 型自润滑导板

2263.

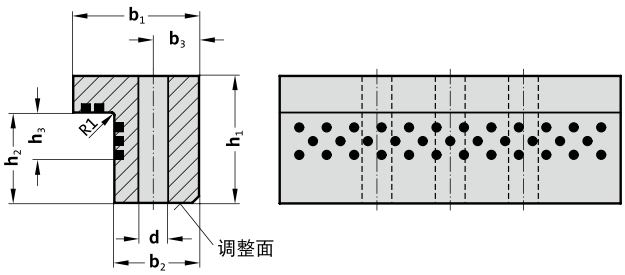

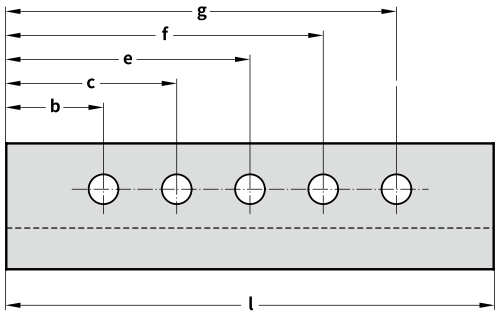

Material 材料:

CuZn25Al5Fe3Mn3 + 固体润滑剂 Solid lubricant

2263. L type self-lubricating guide plate
2263. L 型自润滑导板

b1	l	h1	b2	b3	h2	h3	b	c	e	f	g	d	螺栓孔数量
25	125	15.5	18	9	8.5	6	27.5	-	-	-	97.5	9	2
25	160	15.5	18	9	8.5	6	27.5	-	-	-	123.5	9	2
32	125	30.5	22	11	15.5	9	27.5	-	-	-	97.2	11	2
32	160	30.5	22	11	15.5	9	27.5	-	-	-	132.5	11	2
32	200	30.5	22	11	15.5	9	27.5	-	-	-	172.5	11	2
45	100	50.5	30	15	34.5	18	27.5	-	-	-	72.5	13.5	2
45	160	50.5	30	15	34.5	18	27.5	-	-	-	132.5	13.5	2
50	100	55.5	37	20	39.5	23	27.5	-	-	-	72.5	13.5	2
50	160	55.5	37	20	39.5	23	27.5	-	-	-	132.5	13.5	2
70	160	75.5	50	30	55.5	35	35	-	-	-	125	17.5	2
70	200	75.5	50	30	55.5	35	35	-	-	-	165	17.5	2
70	250	75.5	50	30	55.5	35	35	-	125	-	215	17.5	3
70	400	75.5	50	30	55.5	35	35	125	200	275	365	17.5	5
85	160	90.5	63	38	65.5	45	42.5	-	-	-	117.5	22	2
85	200	90.5	63	38	65.5	45	42.5	-	-	-	157.5	22	2
85	250	90.2	63	38	65.5	45	42.5	-	125	-	207.5	22	3
85	400	90.5	63	38	65.5	45	42.5	125	200	275	357.5	22	5

Order 订购

Catalog No. 目录号	.	b1	.	l	.	h1
2263	.	025	.	125	.	15.5

2280

Wedge self-lubricating V-shaped guide plate, VDI3357
斜楔自润滑 V 型导向板，VDI3357

2280.

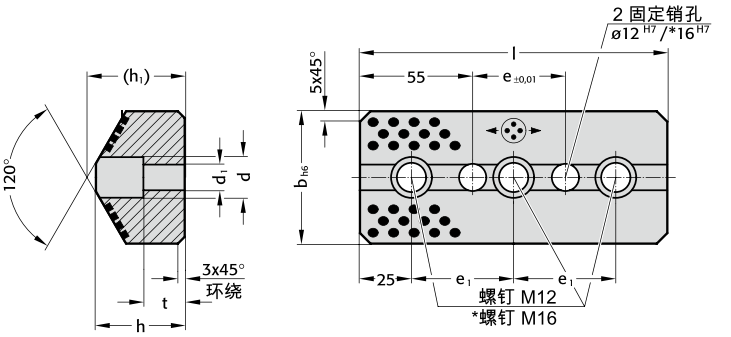

Material 材料：

CuZn25Al5Fe3Mn3 + 固体润滑剂 Solid lubricant

2280. Wedge self-lubricating V-shaped guide plate, VDI3357 2280. 斜楔自润滑 V 型导向板，VDI3357										
b	h	(h1)	h3	l	e	e_1	d	d1	t	螺栓孔数量
65	44	(47)	65	150	45	100	20	13.5	20	2
65	44	(47)	65	200	95	150	20	13.5	20	2
65	44	(47)	65	250	145	100	20	13.5	20	3
65	44	(47)	65	300	195	125	20	13.5	20	3
125	47	(52)	85	150	45	100	26	17.5	15	2
125	47	(52)	85	200	95	150	26	17.5	15	2
125	47	(52)	85	250	145	100	26	17.5	15	3
125	47	(52)	85	300	195	125	26	17.5	15	3
125	52	(57)	85	150	45	100	26	17.5	15	2
125	52	(57)	85	200	95	150	26	17.5	15	2
125	52	(57)	85	250	145	100	26	17.5	15	3
125	52	(57)	85	300	195	125	26	17.5	15	3

Order 订购

Catalog No. 目录号	.	b	.	l	.	h
2280	.	065	.	150	.	044

2580

Wedge V-shaped guide plate, VDI3357
斜楔 V 型导向板，VDI3357

2580.

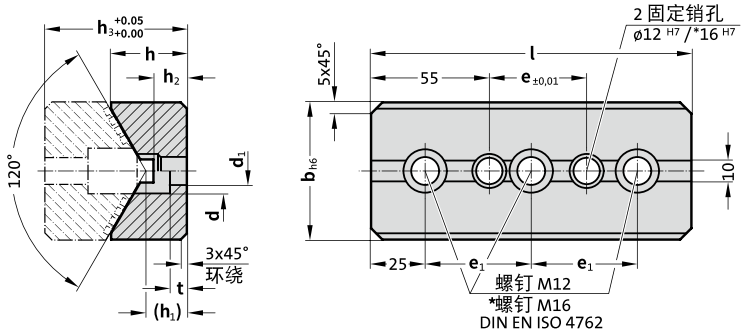

Material 材料：
Steel 钢

Description 说明：
V 面表面高频处理
V surface high frequency processing
硬度 Hardness：55-60HRC

2580. Wedge V-shaped guide plate, VDI3357
2580. 斜楔 V 型导向板，VDI3357

b	h	(h1)	h2	h3	l	e	e1	d	d1	t	螺栓孔数量
65	35	(18)	17	65	150	45	100	20	13.5	8	2
65	35	(18)	17	65	200	95	150	20	13.5	8	2
65	35	(18)	17	65	250	145	100	20	13.5	8	3
65	35	(18)	17	65	300	195	125	20	13.5	8	3
125	60	(33)	32	85	150	45	100	26	17.5	15	2
125	60	(33)	32	85	200	95	150	26	17.5	15	2
125	60	(33)	32	85	250	145	100	26	17.5	15	3
125	60	(33)	32	85	300	195	125	26	17.5	15	3
125	60	(28)	27	85	150	45	100	26	17.5	15	2
125	60	(28)	27	85	200	95	150	26	17.5	15	2
125	60	(28)	27	85	250	145	100	26	17.5	15	3
125	6	(28)	27	85	300	195	125	26	17.5	15	3

Order 订购

Catalog No. 目录号	.	b	.	l	.	h
2580	.	065	.	150	.	035

2230

Self-lubricating guide plate, Japanese standard
自润滑导板，日本标准

Material 材料：

CuZn25Al5Fe3Mn3 + 固体润滑剂 Solid lubricant

2230

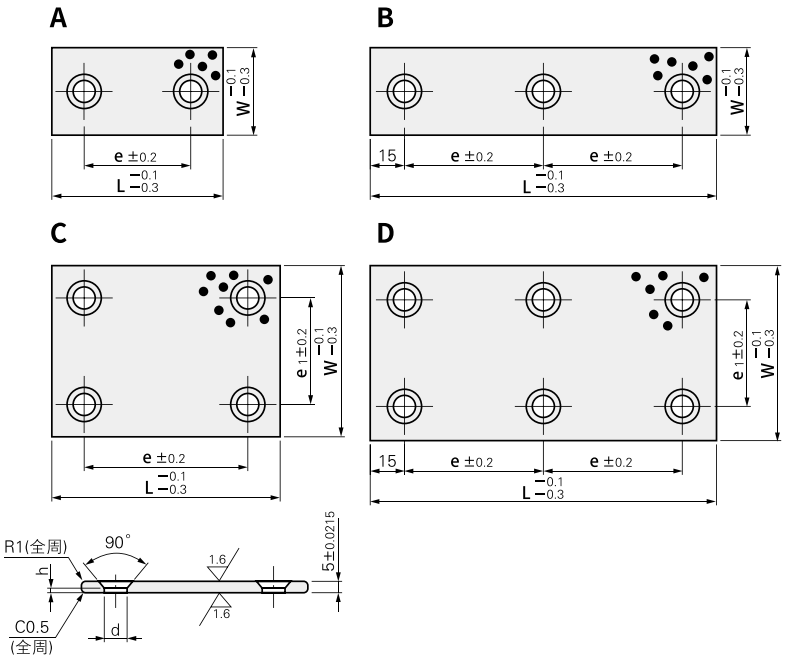

2230. Self-lubricating guide plate, Japanese standard
2230. 自润滑导板，日本标准

e	e1	d	h	W	L	螺栓孔数量	安装螺栓
20	-	6.5	1.0	18	50	A	M6
45	-	6.5	1.0	18	75	A	M6
70	-	6.5	1.0	18	100	A	M6
60	-	6.5	1.0	18	150	B	M6
20	-	10	0.8	28	50	A	M8
45	-	10	0.8	28	75	A	M8
70	-	10	0.8	28	100	A	M8
60	-	10	0.8	28	150	B	M8
20	-	10	0.8	38	50	A	M8
45	-	10	0.8	38	75	A	M8
70	-	10	0.8	38	100	A	M8
60	-	10	0.8	38	150	B	M8
45	-	10	0.8	48	75	A	M8
70	-	10	0.8	48	100	A	M8
90	-	10	0.8	48	120	A	M8
60	-	10	0.8	48	150	B	M8
45	45	10	0.8	75	75	C	M8
70	45	10	0.8	75	100	C	M8
95	45	10	0.8	75	125	C	M8
60	45	10	0.8	75	150	D	M8
70	70	10	0.8	100	100	C	M8
95	70	10	0.8	100	123	C	M8
60	70	10	0.8	100	150	D	M8

Order 订购

Catalog No. 目录号	.	W	.	L	.	厚度
2230	.	018	.	050	.	005

2510

Steel guide plate, NAAMS
钢导板，NAAMS

2510.

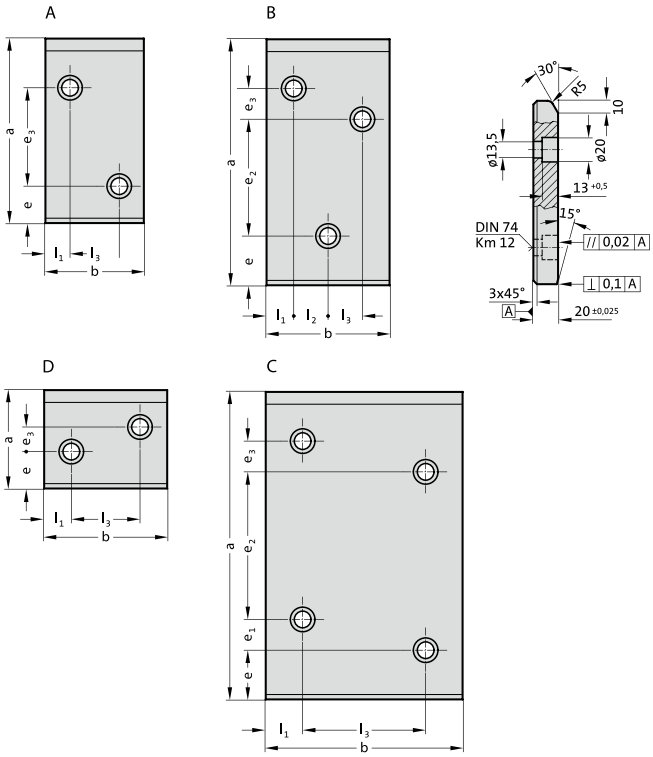

Material: 材料 :

Steel 钢

Description 说明:

表面高频处理 Surface high frequency processing

硬度 Hardness：55~60HRC

2510. Steel guide plate, NAAMS
2510. 钢导板，NAAMS

形状	b	a	l1	l2	l3	e	e_1	e_2	e_3	螺栓孔数量
A	50	100	25	-	-	30	-	-	30	2
A	50	150	25	-	-	30	-	-	80	2
A	50	200	25	-	-	40	-	-	120	2
A	80	100	20	-	40	30	-	-	30	2
A	80	150	20	-	40	30	-	-	80	2
A	80	200	20	-	40	40	-	-	120	2
A	80	250	20	-	40	40	-	-	170	2
B	80	315	20	20	20	40	-	210	25	3
D	100	50	22	-	56	14	-	-	13	2
D	100	80	22	-	56	30	-	-	20	2
A	100	100	22	-	56	30	-	-	30	2
A	100	150	22	-	56	30	-	-	80	2
B	100	200	22	28	28	40	-	95	25	3

2510. Steel guide plate, NAAMS
2510. 钢导板，NAAMS

形状	b	a	l1	l2	l3	e	e_1	e_2	e_3	螺栓孔数量
B	100	250	22	28	28	40	-	145	25	3
B	100	315	22	28-	28	40	-	210	25	3
D	125	80	25	-	75	30	-	-	20	2
A	125	100	25	-	75	30	-	-	30	2
A	125	150	25	-	75	30	-	-	80	2
B	125	200	25	37	38	40	-	91	25	3
B	125	250	25	37	38	40	-	145	25	3
C	125	315	25	-	75	40	25	165	25	4
A	160	100	30	-	100	30	-	-	30	2
A	160	150	30	-	100	30	-	-	80	2
B	160	200	30	50	50	40	-	95	25	3
C	160	250	30	-	100	40	25	120	25	4
C	160	315	30	-	100	40	25	185	25	4

Order 订购

Catalog No. 目录号	.	b	.	a	.	厚度
2510	.	050	.	100	.	020

2511

Guides plate, steel with oil groove, CNOMO
钢 带油槽导板，CNOMO

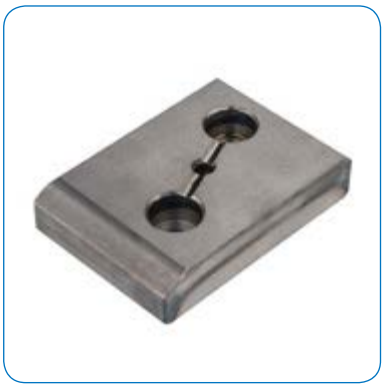

Material: 材料 :

Steel 钢

Description 说明:

表面高频处理 Surface high frequency processing

硬度 Hardness：55~60HRC

2511.

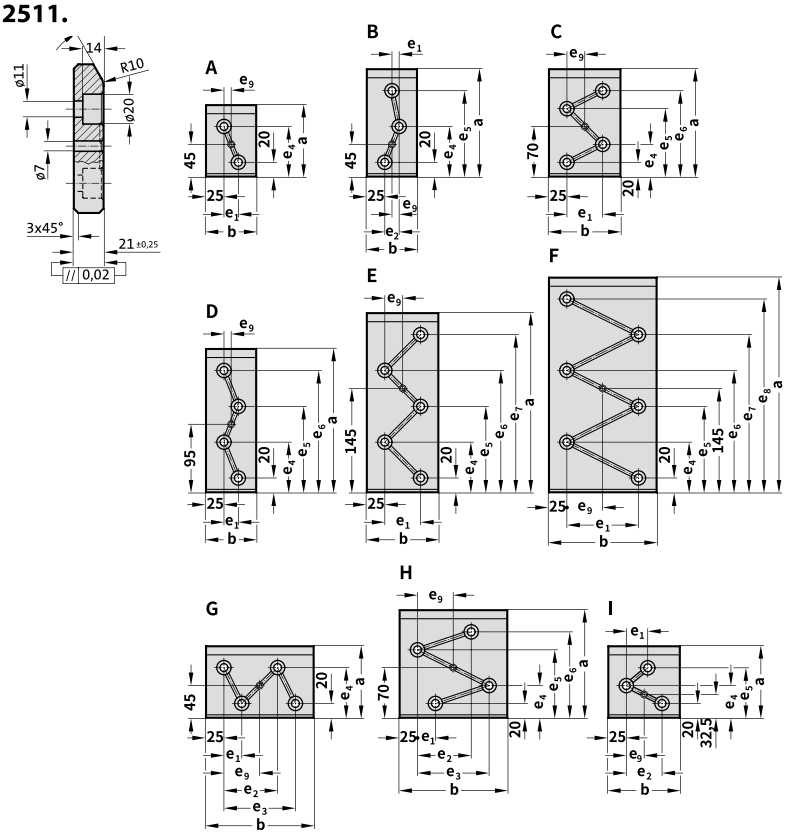

2960.44.45.

2511. Guides plate, steel with oil groove, CNOMO
2511. 钢 带油槽导板，CNOMO

形状	b	a	e_1	e_2	e_3	e_4	e_5	e_6	e_7	e_8	e_9	螺栓孔数量
A	70	100	20	-	-	70	-	-	-	-	10	2
B	70	150	10	20	-	70	120	-	-	-	10	3
D	70	200	20	-	-	70	120	170	-	-	10	4
I	100	100	30	50	-	45	70	-	-	-	25	3
c	100	150	50	-	-	45	95	120	-	-	25	4
D	100	200	50	-	-	70	120	170	-	-	25	4
E	100	250	50	-	-	70	120	170	220	-	25	5
F	100	300	50	-	-	70	120	170	220	270	25	6
G	150	100	25	75	100	70	-	-	-	-	50	4
H	150	150	25	75	100	45	95	120	-	-	50	4
D	150	200	100	-	-	70	120	170	-	-	50	4
E	150	250	100	-	-	70	120	170	220	-	50	5
F	150	300	100	-	-	70	120	170	220	270	50	6
G	200	100	50	100	150	70	-	-	-	-	75	4

Order 订购

Catalog No. 目录号	.	b	.	a	.	厚度
2511	.	070	.	100	.	021

2512

Wedge, self-lubricating steel guide plate
斜楔，自润滑钢导板

2512.

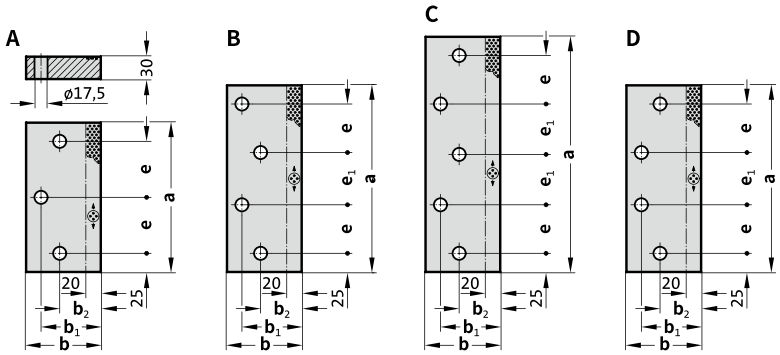

Material: 材料 :

Steel 钢 + 固体润滑剂

Description 说明:

表面高频处理 Surface high frequency processing

硬度 Hardnes：55~60HRC

2512. Wedge, self-lubricating steel guide plate
2512. 斜楔，自润滑钢导板

形状	b	a	b1	b2	e	e_1	螺栓孔数量
A	75	200	55	40	75	-	3
B	75	250	55	40	65	70	4
D	75	250	55	40	65	70	4
A	75	250	55	40	100	-	3
C	75	315	55	40	65	67.5	5
C	75	350	55	40	75	75	5
C	75	400	55	40	90	85	5
C	75	450	55	40	100	100	5
A	100	200	80	55	75	-	3
B	100	250	80	55	65	70	4
D	100	250	80	55	65	70	4
A	100	250	80	55	100	-	3
C	100	315	80	55	65	67.5	5
C	100	350	80	55	75	75	5
C	100	400	80	55	90	85	5
C	100	450	80	55	100	100	5

2512. Wedge, self-lubricating steel guide plate
2512. 斜楔，自润滑钢导板

形状	b	a	b1	b2	e	e_1	螺栓孔数量
A	125	200	105	65	75	-	3
B	125	250	105	65	65	70	4
D	125	250	105	65	65	70	4
A	125	250	105	65	100	-	3
C	125	315	105	65	65	67.5	5
C	125	350	105	65	75	75	5
C	125	400	105	65	90	85	5
C	125	450	105	65	100	100	5
A	150	200	130	65	75	-	3
B	150	250	130	65	65	70	4
D	150	250	130	65	65	70	4
A	150	250	130	65	100	-	3
C	150	315	130	65	65	67.5	5
C	150	350	130	65	75	75	5
C	150	400	130	65	90	85	5
C	150	450	130	65	100	100	5

Order 订购

Catalog No. 目录号	.	b	.	a	.	厚度
2512	.	075	.	200	.	030

2540
2246

Self-lubricating guide plate, VDI 3387
自润滑导向板，VDI 3387

2540

2246

2540

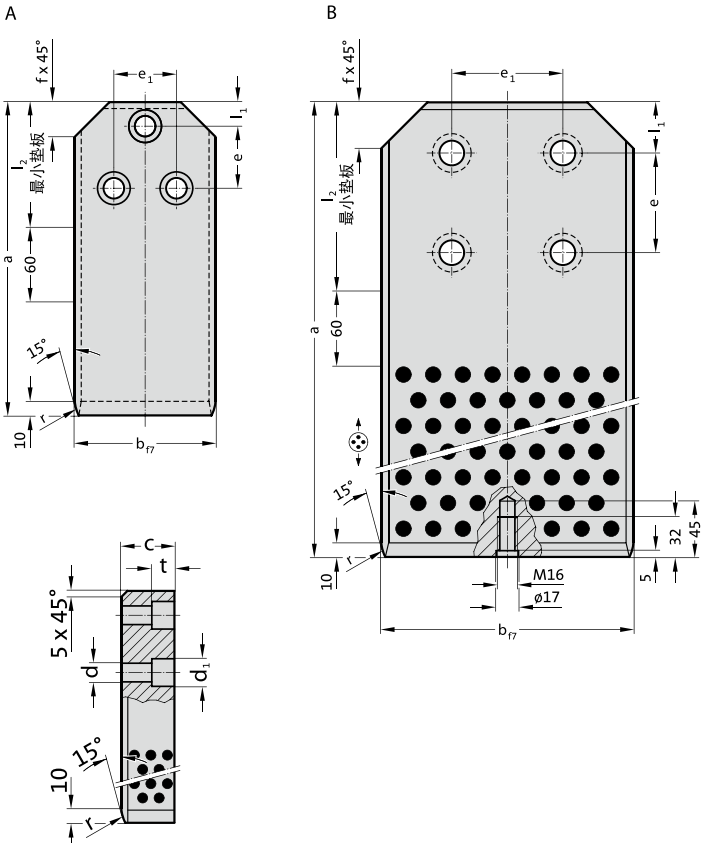

Material 材料：

2540：Steel 钢
2246：CuZn25Al5Fe3Mn3 + 固 体 润 滑 剂 Solid lubricant

Description 说明：

2540：石墨位置表面高频处理 Graphite position surface high frequency processing

硬度 Hardnes：
2540：55~60HRC
2246：≥210HB

2540./2246. Self-lubricating guide plate, VDI 3387
2540./2246. 自润滑导向板，VDI 3387

形状	b	a	c	l1	l2	e	e_1	d	d1	f	t	r	螺栓孔数量
A	63	180	36	20	90	50	36	14	20	18	16	16	3
A	63	200	36	20	90	50	36	14	20	18	16	16	3
A	63	224	36	20	90	50	36	14	20	18	16	16	3
A	71	180	36	20	90	50	36	14	20	18	16	16	3
A	71	200	36	20	90	50	36	14	20	18	16	16	3
A	71	224	36	20	90	50	36	14	20	18	16	16	3
A	90	200	45	20	100	50	50	18	26	28	21	25	3
A	90	224	45	20	100	50	50	18	26	28	21	25	3
A	90	250	45	20	100	50	50	18	26	28	21	25	3
A	112	200	45	20	100	50	50	18	26	28	21	25	3
A	112	224	45	20	100	50	50	18	26	28	21	25	3
A	112	250	45	20	100	50	50	18	26	28	21	25	3
B	140	315	45	40	150	80	90	22	33	36	25.5	25.5	4
B	140	400	45	40	150	80	90	22	33	36	25.5	25.5	4
B	140	400	56	40	150	80	90	22	33	36	25.5	25.5	4
B	190	400	56	40	150	80	90	22	33	36	25.5	25.5	4
B	240	500	56	40	250	160	160	26	40	36	30.5	30.5	4
B	240	630	56	40	250	160	160	26	40	36	30.5	30.5	4

Order 订购

Catalog No. 目录号	.	b	.	a	.	c
2540	·	063	·	180	·	036
2246	·	063	·	180	·	036

2570
2270

Wedge active plate, VDI 3357
斜楔主动板， VDI 3357

2570

2270

2570.

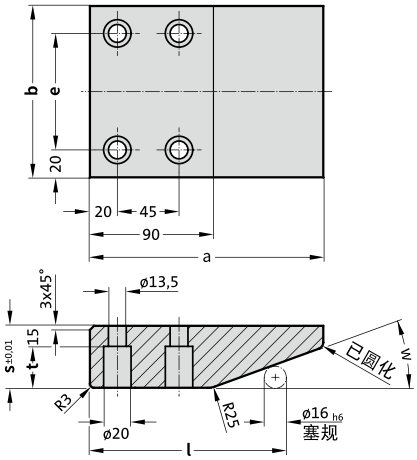

2270.

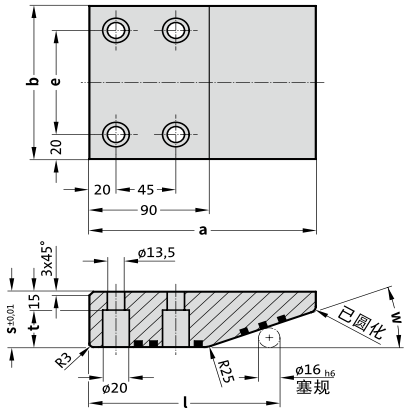

Material 材料：

2570：Steel 钢
2270：CuZn25Al5Fe3Mn3 + 固体润滑剂

Description 说明：

2570：表面高频处理 Surface high frequency processing

硬度 Hardnes：
2570：55-60HRC
2270：≥210HB

2570./2270. Wedge active plate, VDI 3357
2570./2270. 斜楔主动板 ,VDI 3357

b	a	s	e	t	w	l
100	170	45	60	30	20	143.37
125	170	45	85	30	20	143.37
150	170	45	110	30	20	143.34
200	170	45	160	30	20	143.37
100	150	45	60	30	30	127.86
100	170	60	60	45	30	127.86
125	150	45	85	30	30	127.86
125	170	60	85	45	30	127.86
150	150	45	110	30	30	127.86
150	170	60	110	45	30	127.86
200	150	45	160	30	30	127.86
200	170	60	160	45	30	127.86

Order 订购

Catalog No. 目录号	.	b	.	a	.	s
2570	.	100	.	170	.	045
2270	.	100	.	170	.	045

HDB-850 系列

金属烧结轴承

Bronze-Wrapped Bushings

Directory 目录

850 Series / A - Steel Cast Copper
850 系列 / A - 钢铸铜

1720-A
Composite self-lubricating guide bush
复合型自润滑导套

P.58

1760-A
Flanged composite self-lubricating guide bush, ISO 9448-6
带法兰复合型自润滑导套，ISO 9448-6

P.59

1770-A
Flanged composite self-lubricating guide bush, ISO 9448-6
带法兰复合型自润滑导套，ISO 9448-6

P.60

2710-A
Composite self-lubricating guide plate, VDI 3357
复合型自润滑导板，VDI 3357

P.61

2720-A
Composite self-lubricating guide plate (Japanese standard)
复合型自润滑导板（日本标准）

P.62

2781-A
Slider , VDI 3357
滑块 , VDI 3357

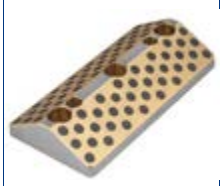

P.66

850 Series / B - Copper Powder + Graphite Sintering
850 系列 / B - 铜粉 + 石墨烧结

1720-B
Composite self-lubricating guide bush
复合型自润滑导套

P.58

1760-B
Flanged composite self-lubricating guide bush, ISO 9448-6
带法兰复合型自润滑导套，ISO 9448-6

P.59

1770-B
Flanged composite self-lubricating guide bush, ISO 9448-6
带法兰复合型自润滑导套，ISO 9448-6

P.60

2710-B
Composite self-lubricating guide plate, VDI 3357
复合型自润滑导板，VDI 3357

P.61

2720-B
Composite self-lubricating guide plate (Japanese standard)
复合型自润滑导板（日本标准）

P.62

2721-B
Composite self-lubricating guide plate
复合型自润滑导板

P.63

2722-B
Composite self-lubricating guide plate
复合型自润滑导板

P.64

2780-B
Compound type, wedge type V self-lubricating guide plate
复合型，斜楔 V 型自润滑导板

P.65

2781-B
Compound type, wedge type V self-lubricating guide plate
复合型，斜楔 V 型自润滑导板

P.66

Directory 目录

850 Series /C - Iron nickel Powder + Graphite Sintering
850 系列 / C - 铁镍粉 + 石墨烧结

HDB-850

Bronze-Wrapped Bushings
金属烧结轴承

850-C材料组织 Material Structure

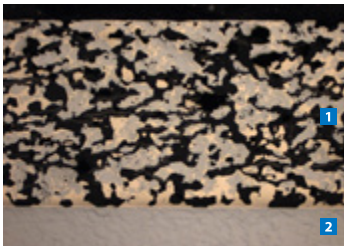

1. Graphite-containing iron-nickel sintered layer
2. Steel substrate
1.含石墨的铁镍烧结层
2.钢基板

Introduced products 产品简介

HDB-850 系列是在钢背上铸造或烧结而成的复合材料，一般复合成厚度0.3-2mm。通过不同的材料组合从而达到不同的承载力和摩擦系数。

The HDB-850 series is a composite material that is cast or sintered on a steel back and is generally compounded to a thickness of 0.3 to 2 mm. Different bearing capacities and friction coefficients are achieved by different material combinations.

850-A Features 850-A特性

- Casting copper alloy on carbon steel surface, the manufacturing process makes the copper and steel joint surface reach complete metallurgical bonding
- At the same time, it has the wear resistance of copper alloy and the high mechanical strength of steel.
- Reduce material costs while also improving its carrying capacity
- Self-lubricating effect can be achieved after inlaying graphite.

- 碳钢表面浇铸铜合金，制造工艺使铜和钢结合面达到完全的冶金结合
- 同时具备了铜合金的耐磨性和钢的高机械强度性能
- 降低材料成本，同时也提高了其承载能力
- 镶嵌石墨后可达到自润滑效果。

850-B, C Features 850-B、C特性

- The copper-iron alloy is used as the main raw material, and contains low-friction materials such as graphite and molybdenum disulfide, which are processed by high-temperature sintering technology.
- The diffused solid lubricant is evenly distributed, and there is no creep phenomenon under microscopic movement. Suitable for small stroke micro-motion conditions.
- The solid lubricant is released to the surface of the pair of parts in time when friction occurs, and it can stably provide a solid lubricating transfer film for its surface.
- More wear resistance and high temperature resistance than traditional powder metallurgy
- The metal substrate can be made of copper, carbon steel and stainless steel to adapt to different working conditions.

- 以铜铁合金为主要原材料，内含石墨、二硫化钼等低摩擦材料，采用高温烧结技术加工而成
- 弥散型固体润滑剂分布均匀，微观移动下不会出现爬行现象。适合小行程微动工况。
- 固体润滑剂在摩擦发生时会被及时地释放到对偶件表面，可以稳定地为其表面提供固体润滑转移膜，
- 相比传统的粉末冶金更具有耐磨性和耐高温性能
- 金属基板可采用铜、碳钢和不锈钢，从而适应不同的工况。

技术参数 Technical Data

参数 Data				A	B	C
max. P	干摩擦 /dry	动载荷 dynamic	N/mm^2	100	45	50
	-	静载荷 / 微小运动，static		250	100	120
max. v	干摩擦 /dry		m/s	0.5	0.7	0.6
	定期注油 /geschmiert			1	1.4	1.6
Pv max.	干摩擦 /dry		$N/mm^2 \cdot m/s$	1.65	1.4	1.5
	定期注油 /geschmiert			3.25	2.3	2.5
工况温度 / service temperature range			° C	-100+300	-100+380	-100+400
密度 / Density			kg/dm^3	7.9	6.2	6.2
抗拉强度 / 结合强度 Tensile strength			N/mm^2	430	150	150
硬度 / hardness			HB	≥210	≥40	≥45

1720-A
1720-B
1820-C

Composite self-lubricating guide bush
复合型自润滑导套

HDB®

1720-A

1720-B

1820-C

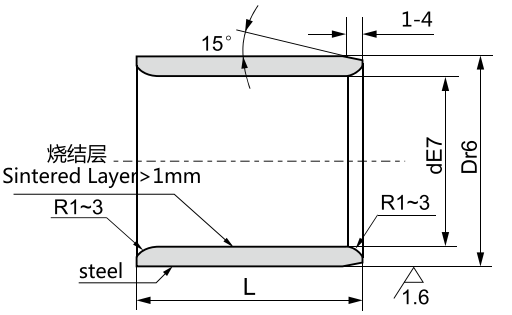

Material: 材料 :

1720-A：钢铸黄铜 + 固体润滑剂（镶嵌型）Steel cast brass + solid lubricant (set type)

1720-B：钢烧结铜合金 + 固体润滑剂（弥散型）Steel sintered copper alloy + solid lubricant (dispersion type)

1820-C：钢烧结铁镍合金 + 固体润滑剂（弥散型）Steel sintered iron-nickel alloy + solid lubricant (dispersion type)

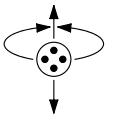

1721-A./1720-B./1820-C. Composite self-lubricating guide bush
1721-A./1720-B./1820-C. 复合型自润滑导套

d	20	25	25	28	30	30	35	35	40	45	45	50	50	50	55	60	60	65	70	70	75	75	80	80	90	100
			+0.073 +0.040							+0.089 +0.050									+0.106 +0.060						+0.126 +0.072	
D	30	33	35	38	38	40	44	45	50	55	60	60	62	65	70	74	75	80	85	90	90	95	96	100	110	120
	+0.049 +0.028				+0.059 +0.034							+0.071 +0.041				+0.073 +0.043					+0.086 +0.051				+0.089 +0.054	
10																										
12		●			●																					
15	●	●	●		●	●			●																	
16	●	●	●																							
19																										
20	●	●	●	●	●	●	●	●	●			●														
25	●	●	●	●	●	●	●	●	●																	
30	●	●	●	●	●	●	●	●	●	●	●	●	●	●	●	●	●		●							
35	●	●	●		●	●	●	●	●	●		●				●	●		●							
40	●	●	●	●	●	●	●	●	●	●	●	●	●	●	●	●	●	●	●				●	●		
50	●	●	●		●	●	●	●	●	●	●	●	●	●	●	●	●	●	●	●	●		●	●	●	●
60		●	●		●	●	●	●	●	●	●	●	●	●	●	●	●	●	●	●	●		●	●	●	●
70									●		●	●	●	●	●	●	●	●	●	●	●		●	●	●	●
80									●		●	●		●		●	●	●	●	●	●	●	●	●	●	●
90																									●	●
100														●			●		●		●	●	●	●	●	●
120																							●	●	●	●

Order 订购

Catalog No. 目录号	.	d	.	D	.	L	–	材质
1720	.	020	.	030	.	015	–	A
1720	.	020	.	030	.	015	–	B
1820	.	020	.	030	.	015	–	C

1760-A
1760-B
1860-C

Flanged composite self-lubricating guide bush, IS0 9448-6
带法兰复合型自润滑导套，IS0 9448-6

HDB®

1760-A

1760-B

1860-C

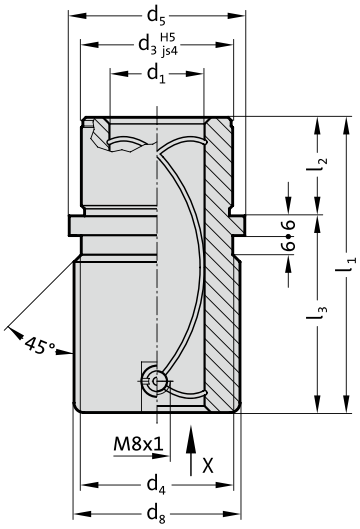

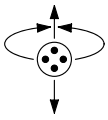

Material 材料：

1760-A：钢铸锡青铜
Steel cast tin bronze

1760-B：钢烧结铜合金 + 固体润滑剂（弥撒型）
Steel sintered copper alloy + solid lubricant

(mass type)

1860-C: 钢烧结铁镍合金 + 固体润滑剂（弥撒型）
Steel sintered iron-nickel alloy + solid lubricant (mass type)

Description 说明：

外径表面高频处理 OD surface high frequency processing

硬度 Hardness：500+100 HV 10.

1760-A./1760-B./1860-C. Flanged composite self-lubricating guide bush, IS0 9448-6
1760-A./1760-B./1860-C. 带法兰复合型自润滑导套，IS0 9448-6

d_1	19 20	24 25	30 32	38 40	48 50	60 63	80
允许偏差	+0.012 +0.003	+0.012 +0.003	+0.015 +0.004	+0.015 +0.004	+0.015 +0.004	+0.018 +0.005	+0.018 +0.005
d_3	32	40	48	58	70	85	105
d_4	32	40	48	58	70	85	105
d_5	40	48	56	66	80	95	118
d_8	39	46	53	63	77	92	115
l_1	59	79	93	108	127	150	150
l_2	23	23	30	37	47	60	60
l_3	36	56	63	71	80	90	90

Order 订购

Catalog No. 目录号	.	d_1	.	l_1	–	材质
1760	.	019	.	059	–	A
1760	.	019	.	059	–	B
1860	.	019	.	059	–	C

1770-A
1770-B
1870-C

Flanged composite self-lubricating guide bush, IS0 9448-6
带法兰复合型自润滑导套，IS0 9448-6

HDB®

1770-A

1770-B

1870-C

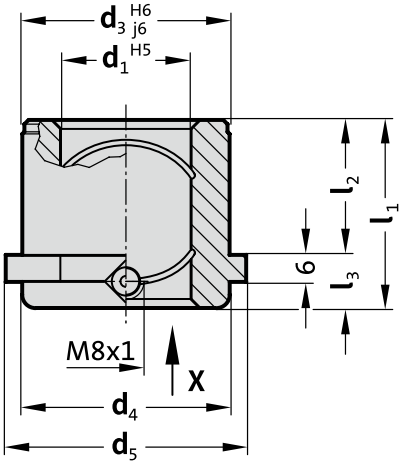

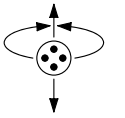

Material 材料：

1770-A：钢铸锡青铜
Steel cast tin bronze

1770-B：钢烧结铜合金 + 固体润滑剂（弥撒型）
Steel sintered copper alloy + solid lubricant

(mass type)

1870-C：钢烧结铁镍合金 + 固体润滑剂（弥撒型）
Steel sintered iron-nickel alloy + solid lubricant (mass type)

Description 说明：

外径表面高频处理 OD surface high frequency processing

硬度 Hardness：500+100 HV 10.

1770-A./1770-B./1870-C. Flanged composite self-lubricating guide bush, IS0 9448-6
1770-A./1770-B./1870-C. 带法兰复合型自润滑导套，IS0 9448-6

d_1	19 20	24 25	30 32	38 40	48 50	60 63	80
d_3	32	40	48	58	70	85	105
d_4	32	40	48	58	70	85	105
d_5	40	48	56	66	80	95	118
l_1	35	35	42	52	65	80	80
l_2	23	23	30	37	47	60	60
l_3	12	12	12	15	18	20	20

Order 订购

Catalog No. 目录号	.	d_1	.	l_1	–	材质
1770	.	019	.	035	–	A
1770	.	019	.	035	–	B
1870	.	019	.	035	–	C

2710-A
2710-B
2810-C

Composite self-lubricating guide plate, VDI 3357
复合型自润滑导板，VDI 3357

HDB®

2710-A

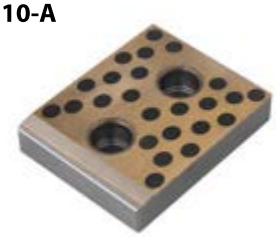

2710-B

2810-C

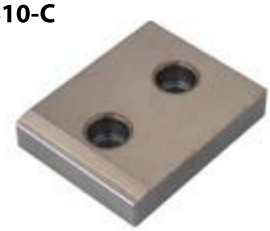

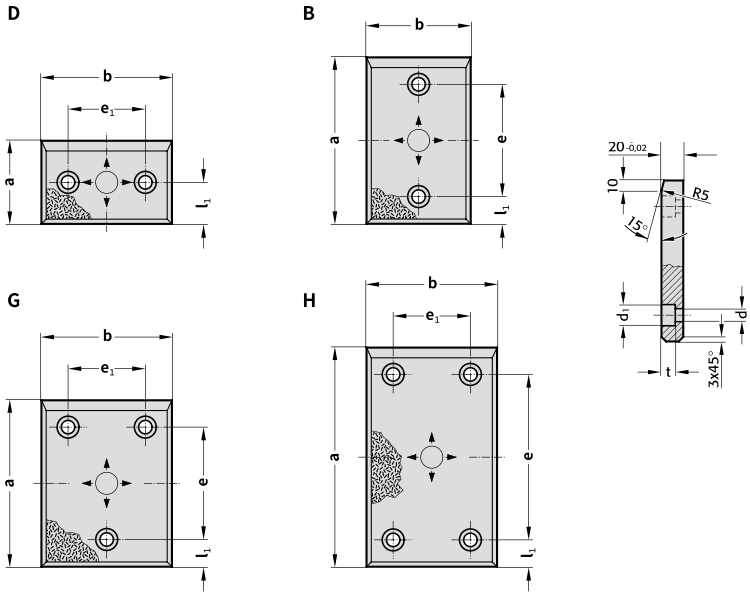

Material: 材料 :

2710-A：钢铸高力黄铜 + 固体润滑剂（镶嵌型）Steel cast CuZn25Al5Fe3Mn3 + solid lubricant (set type)

2710-B：钢烧结铜合金 + 固体润滑剂（弥散型）Steel sintered copper alloy + solid lubricant (dispersion type)

2810-C：钢烧结铁镍合金 + 固体润滑剂（弥散型）Steel sintered iron-nickel alloy + solid lubricant (dispersion type)

2710-A./2710-B./2810-C. Composite self-lubricating guide plate, VDI 3357
2710-A./2710-B./2810-C. 复合型自润滑导板，VDI 3357

形状	b	a	l1	e	e1	d	d1	t	螺栓孔数量
B	50	80	25	30	-	9	15	9	2
B	50	100	25	50	-	13.5	20	13	2
B	50	125	25	75	-	13.5	202	13	2
B	50	160	25	110	-	13.5	20	13	2
B	50	200	25	150	-	13.5	20	13	2
D	80	50	25	-	30	9	15	9	2
B	80	80	25	30	-	13.5	20	13	2
B	80	100	25	50	-	13.5	20	13	2
B	80	125	25	75	-	13.5	20	13	2
B	80	160	25	110	-	13.5	20	13	2
B	80	200	25	150	-	13.5	20	13	2
B	80	250	40	170	-	13.5	20	13	2
B	80	315	40	235	-	13.5	20	13	2
D	100	50	25	-	50	13.5	20	13	2
D	100	80	40	-	50	13.5	20	13	2
B	100	100	25	50	-	13.5	20	13	2
B	100	125	25	75	-	13.5	20	13	2
B	100	160	25	110	-	13.5	20	13	2
B	100	200	25	150	-	13.5	20	13	2

2710-A./2710-B./2810-C. Composite self-lubricating guide plate, VDI 3357
2710-A./2710-B./2810-C. 复合型自润滑导板，VDI 3357

形状	b	a	l1	e	e1	d	d1	t	螺栓孔数量
B	100	250	40	170	-	13.5	20	13	2
B	100	315	40	235	-	13.5	20	13	2
D	125	50	25	-	75	13.5	20	13	2
D	125	80	40	-	75	13.5	20	13	2
G	125	100	25	50	75	13.5	20	13	3
G	125	125	25	75	75	13.5	20	13	3
G	125	160	25	110	75	13.5	20	13	3
G	125	200	25	150	75	13.5	20	13	3
G	125	250	40	170	75	13.5	20	13	3
G	125	315	40	235	75	13.5	20	13	3
D	160	50	25	-	110	13.5	20	13	3
D	160	80	40	-	110	13.5	20	13	3
G	160	100	25	50	110	13.5	20	13	3
G	160	125	25	75	110	13.5	20	13	3
G	160	160	25	110	110	13.5	20	13	3
G	160	200	25	150	110	13.5	20	13	3
H	160	250	40	170	110	13.5	20	13	4
H	160	315	40	235	110	13.5	20	13	4

Order 订购

Catalog No. 目录号	.	b	.	a	–	材质
2710	.	50	.	80	–	A
2710	.	50	.	80	–	B
2810	.	50	.	80	–	C

2720-A
2720-B
2820-C

Composite self-lubricating guide plate (Japanese standard)
复合型自润滑导板（日本标准）

HDB®

2720-A

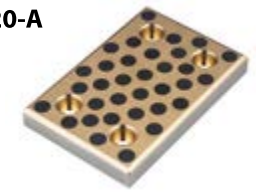

2720-B

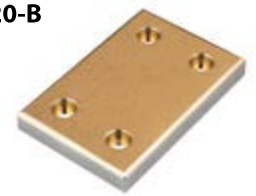

2820-C

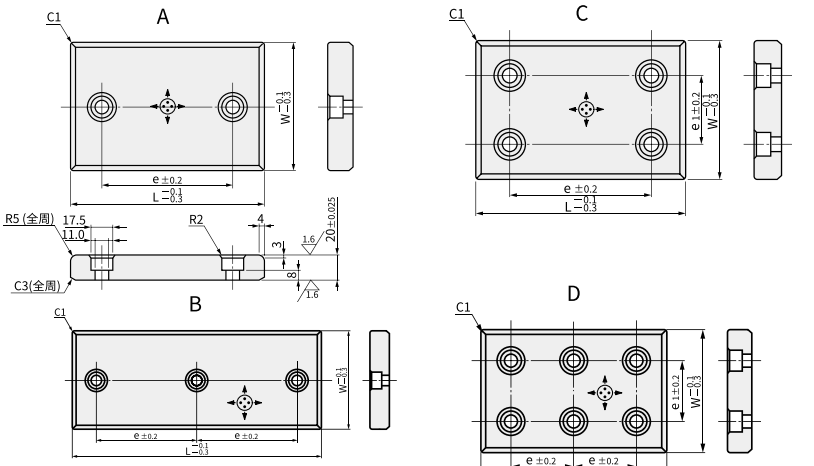

※W＝28、38的
纵向R为R2。

Material 材料：

2720-A：钢铸高力黄铜 + 固体润滑剂（镶嵌型）Steel cast CuZn25Al5Fe3Mn3 + solid lubricant (set type)

2720-B：钢烧结铜合金 + 固体润滑剂（弥散型）Steel sintered copper alloy + solid lubricant (dispersion type)

2820-C：钢烧结铁镍合金 + 固体润滑剂（弥散型）Steel sintered iron-nickel alloy + solid lubricant (dispersion type)

Composite self-lubricating guide plate (Japanese standard)
复合型自润滑导板（日本标准）

e	Catalog No.	W	NO.(L)	形状
45	2214	28	75	A
50			100	A
75			120	A
100			150	A
150			200	A
200			250	A
125			300	B
45		38	75	A
50			100	A
75			125	A
100			150	A
150			200	A
200			250	A
125			300	B
45		48	75	A
50			100	A
75			150	A
100			150	A
150			200	A
200			250	A
125			300	B
45		58	75	A
50			100	A
75			125	A
100			150	A
150			200	A
200			250	A
125			300	B
25		75	75	A
50			100	A
75			125	A
100			150	A
150			200	A
200			250	A
100			300	B
125			300-H	B

Composite self-lubricating guide plate (Japanese standard)
复合型自润滑导板（日本标准）

e	e1	Catalog No.	W	NO.(L)	形状
50	50	2214	100	100	C
75				125	C
100				150	C
150				200	C
200				250	C
200				300	C
125				300-H	D
75	50		125	125	C
100				150	C
150				200	C
200				250	C
200				300	C
200				350	C
75	75			125-H	C
100				150-H	C
150				200-H	C
200				250-H	C
125				300-H	D
200				350-H	C
100	100		150	150	C
150				200	C
200				250	C
250				300	C
125				300-H	D
150	150		200	200	C
200				250	C
250				300	C
125				300-H	D

Order 订购

Catalog No. 目录号	.	W	.	L	.	厚度	—	材质
2720		028	.	075	.	020	—	A
2720		028	.	075	.	020	—	B
2820		028	.	075	.	020	—	C

2721-B
2821-C

Composite self-lubricating guide plate
复合型自润滑导板

2721-B

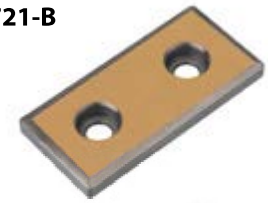

2821-C

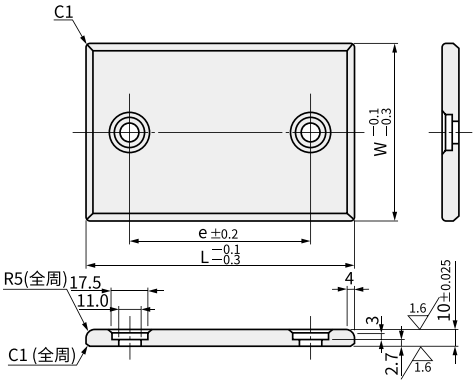

※W＝28、38的纵向R为R2。

W＝28、38时仅纵向(L方向)。

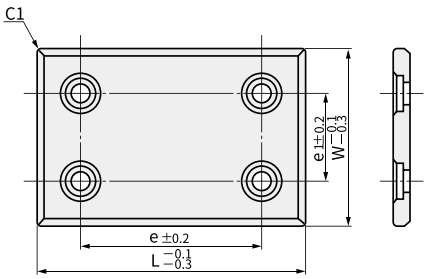

Material: 材料 :

2721-B：钢烧结铜合金 + 固体润滑剂（弥散型）Steel sintered copper alloy + solid lubricant (dispersion type)

2821-C：钢烧结铁镍合金 + 固体润滑剂（弥散型）Steel sintered iron-nickel alloy + solid lubricant (dispersion type)

2721-B./2821-C. Composite self-lubricating guide plate
2721-B./2821-C. 复合型自润滑导板

e	W	L	螺栓孔数量
45	28	75	2
50		100	2
75		125	2
100		150	2
45	38	75	2
50		100	2
75		125	2
100		150	2
45	48	15	2
50		100	2
75		125	2
100		150	2
150		200	2
45	58	75	2
50		100	2
75		125	2
100		150	2
150		200	2
25	75	75	2
50		100	2
75		125	2
100		150	2
125		175	2
150		200	2

2721-B./2821-C. Composite self-lubricating guide plate
2721-B./2821-C. 复合型自润滑导板

e	e1	W	L	螺栓孔数量
50	50	100	100	4
75			125	4
100			150	4
150			200	4
200			250	4
100	50	125	150	4
150			200	4
200			250	4
100	100	150	150	4
150			200	4

Order 订购

Catalog No. 目录号	.	W	.	L	.	厚	–	材质
2721	.	058	.	100	.	010	–	B
2821	.	058	.	100	.	010	–	C

2722-B
2822-C

Composite self-lubricating guide plate
复合型自润滑导板

2722-B

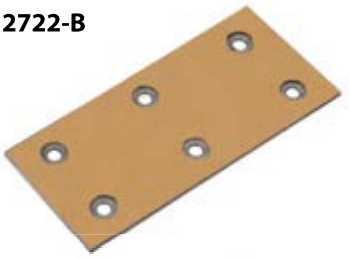

2822-C

A

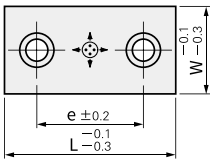

B

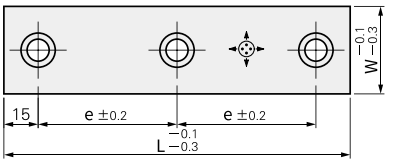

C

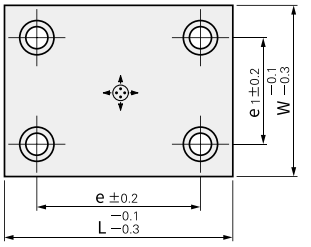

D

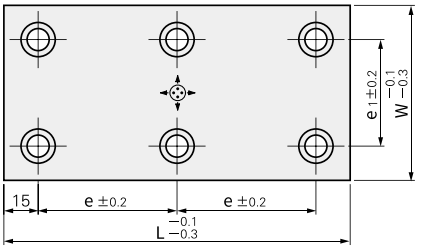

Material: 材料：

2722-B：钢烧结铜合金 + 固体润滑剂（弥散型）Steel sintered copper alloy + solid lubricant (dispersion type)

2822-C：钢烧结铁镍合金 + 固体润滑剂（弥散型）Steel sintered iron-nickel alloy + solid lubricant (dispersion type)

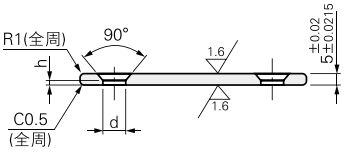

2722-B./2800-C. Composite self-lubricating guide plate 2722-B./2800-C. 复合型自润滑导板							
e	e1	d	h	W	L	螺栓孔数量	安装螺栓
20	-	6.5	1.0	18	50	A	M6
45	-	6.5	1.0	18	75	A	M6
70	-	6.5	1.0	18	100	A	M6
60	-	6.5	1.0	18	150	B	M6
20	-	10	0.8	28	50	A	M8
45	-	10	0.8	28	75	A	M8
70	-	10	0.8	28	100	A	M8
60	-	10	0.8	28	150	B	M8
20	-	10	0.8	38	50	A	M8
45	-	10	0.8	38	75	A	M8
70	-	10	0.8	38	100	A	M8
60	-	10	0.8	38	150	B	M8
45	-	10	0.8	48	75	A	M8
70	-	10	0.8	48	100	A	M8
90	-	10	0.8	48	120	A	M8
60	-	10	0.8	48	150	B	M8
45	45	10	0.8	75	75	C	M8
70	45	10	0.8	75	100	C	M8
95	45	10	0.8	75	125	C	M8
60	45	10	0.8	75	150	D	M8
70	70	10	0.8	100	100	C	M8
95	70	10	0.8	100	123	C	M8
60	70	10	0.8	100	150	D	M8

Order 订购

Catalog No. 目录号	.	W	.	L	.	厚	–	材质
2722	.	058	.	100	.	005	–	B
2822	.	058	.	100	.	005	–	C

2780-B
2880-C

Compound type, wedge type V self-lubricating guide plate
复合型，斜楔 V 型自润滑导板

2780-B

2880-C

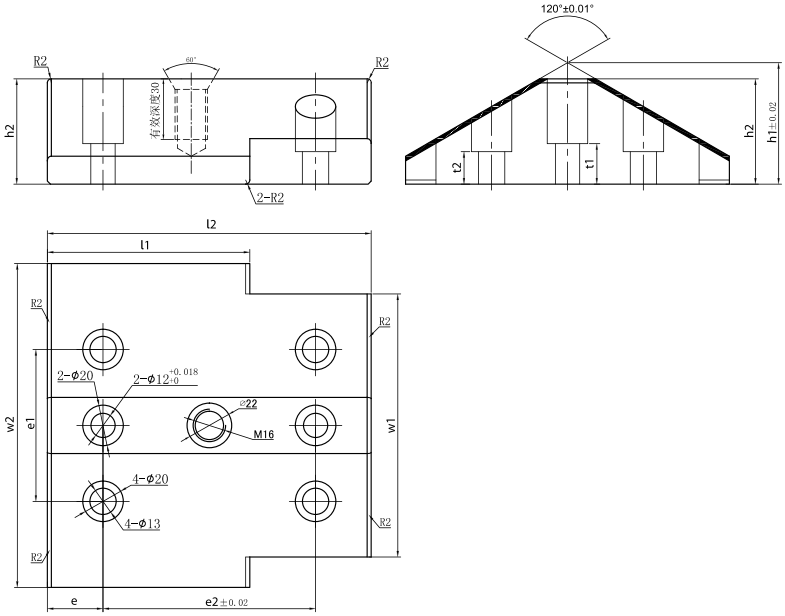

Material: 材料 :

2780-B：钢烧结铜合金 + 固体润滑剂（弥散型）Steel sintered copper alloy + solid lubricant (dispersion type)

2880-C：钢烧结铁镍合金 + 固体润滑剂（弥散型）Steel sintered iron-nickel alloy + solid lubricant (dispersion type)

2780-B./2880-C Compound type, wedge type V self-lubricating guide plate
2780-B./2880-C 复合型，斜楔 V 型自润滑导板

e1	e	w1	w2	e2	l1	l2	h1	h2	t1	t2
75	27.5	130	160	105	100	160	60	52	20	16
60	30	95	120	105	100	165	50	44	25	11

Order 订购

Catalog No. 目录号	.	w2	.	l2	.	h2	–	材质
2780	.	120	.	165	.	044	–	B
2880	.	120	.	165	.	044	–	C

2781-A
2781-B
2881-C

Compound type, wedge type V self-lubricating guide plate, VDI3357
复合型，斜楔 V 型自润滑导板，VDI3357

2781-A

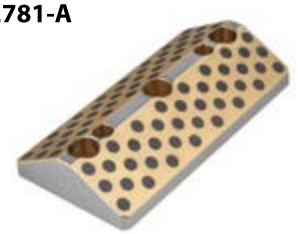

2781-B

2881-C

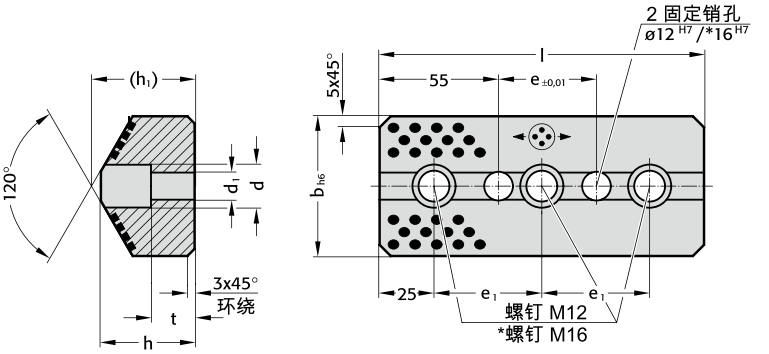

Material: 材料 :

2781-A：钢铸黄铜 + 固体润滑剂（镶嵌型）Steel cast brass + solid lubricant (set type)

2781-B：钢烧结铜合金 + 固体润滑剂（弥散型）Steel sintered copper alloy + solid lubricant (dispersion type)

2881-C：钢烧结铁镍合金 + 固体润滑剂（弥散型）Steel sintered iron-nickel alloy + solid lubricant (dispersion type)

2781-A./2871-B./2881-C Compound type, wedge type V self-lubricating guide plate, VDI3357
2781-A./2871-B./2881-C 复合型，斜楔 V 型自润滑导板，VDI3357

b	h	(h1)	l	e	e_1	d	d1	t	螺栓孔数量
65	44	(47)	150	45	100	20	13.5	20	2
65	44	(47)	200	95	150	20	13.5	20	2
65	44	(47)	250	145	100	20	13.5	20	3
65	44	(47)	300	195	125	20	13.5	20	3
125	47	(52)	150	45	100	26	17.5	15	2
125	47	(52)	200	95	150	26	17.5	15	2
125	47	(52)	250	145	100	26	17.5	15	3
125	47	(52)	300	195	125	26	17.5	15	3
125	52	(57)	150	45	100	26	17.5	15	2
125	52	(57)	200	95	150	26	17.5	15	2
125	52	(57)	250	145	100	26	17.5	15	3
125	52	(57)	300	195	125	26	17.5	15	3

Order 订购

Catalog No. 目录号	.	b	.	l	.	h	–	材质
2781	.	065	.	150	.	044	–	A
2781	.	065	.	150	.	044	–	B
2881	.	065	.	150	.	044	–	C

HDB-80/90 系列

双金属轴承 / 青铜卷制轴承

Bimetal Bushings / Warpped Bronze Bearing

Directory 目录

双金属轴承
Bimetal Bushings

青铜卷制轴承
Warpped Bronze Bearing

5620

Bimetallic Self-lubricating Bushes
双金属自润滑轴套

5620 Bimetallic self-lubricating bearing used high quality low-carbon steel plate as base, sintered porous bronze as its surface, suitable for rotatory oscillating, reciprocating movements on the conditions of high load.low speed, low friction, well wear resistance, long lifetime and better prevent from holding-on.The bronze layer surface can be machined with various of grooves, oil pockets in terms of different work condition. The product is widely used in mining machinery, automobile, building machinery, agriculture equipment, rolling steel industry etc.

5620系列双金属轴套、轴瓦、止推垫片，以优质低碳钢为基体，表面烧结青铜粉，适用于高载低速下的旋转，摇摆运动。具有摩擦系数低、耐磨性能好、使用寿命长、抗咬合性能好等特点，铜合金层可根据要求加工出各种类型的油穴、油槽。产品被广泛应用于矿山机械、汽机车、建筑机械、农用机械、轧钢机械等。

卷制轴承搭口形式
Material Characterisitc

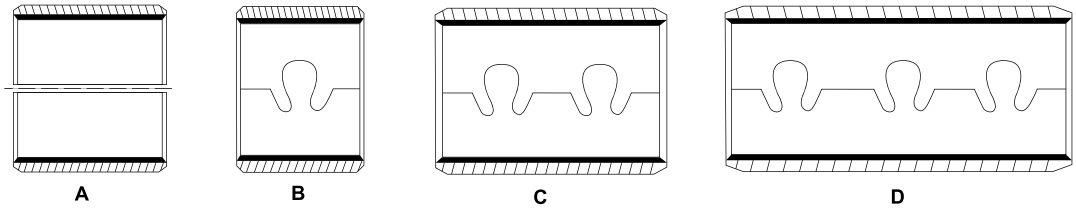

双金属自润滑轴承的油槽形状
Bi-metal self lubricating bearings tank shape

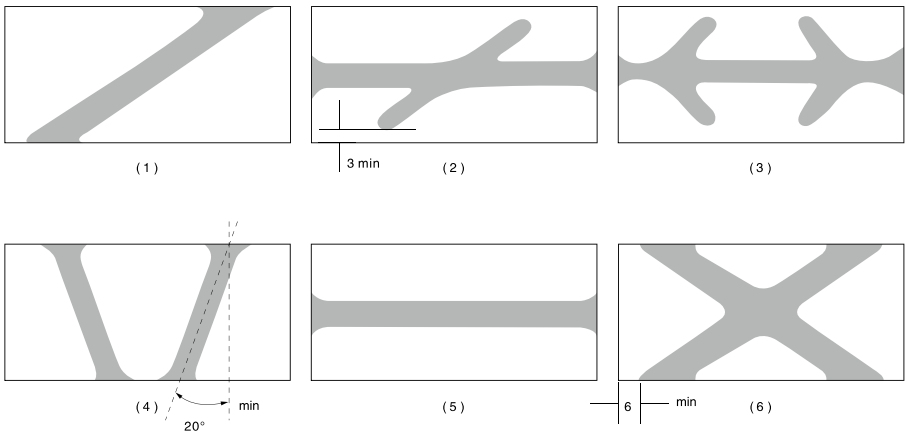

5620

Bimetallic Self-lubricating Bushes
双金属自润滑轴套

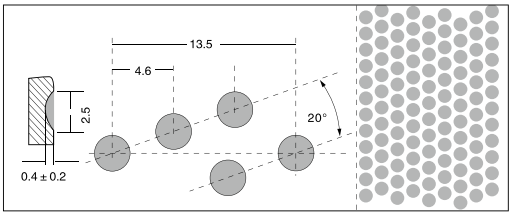

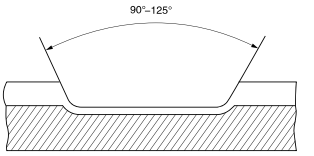

技术参数 Technical Data

项目 Project / 型号 Type		5620	5622
国际标准 International Standard		SAE-797. DIN CuPb10Sn. JIS-LBC3. UNS C93700. Clevite F100. Daido L10. D. A. B. D57. Federal Mogul HF2. Glacier SY. Glyco66. Miba2. 1010.Taiho HF2. Kar l Schmiat KS940SSAE-797. DIN CuPb10Sn. JIS-LBC3. UNS C93700. Clevite F100. Daido L10. D. A. B D57. Federal Mogul HF2 Glacier SY. Glyco66. Miba2. 1010. Taiho HF2. Karl Schmiat Ks940s	SAE=799. GLYCO 68. JIS-LBC6. DAIDO L23. Claciersx. ACLF250
合金成份 Alloy Composition		CuPb10Sn10	CuPb24Sn4
合金硬度 Alloy Hardness		70～100HB	45～70HB
最大承载 P (N/mm^2) Max Load Capacity		150	130
拉伸强度（N/mm^2） Tensile Strength		185	150
最大线速度（油润滑）V(m/s) Max Sliding Speed (Oil Lubrication)		5	10
摩擦系数μ Friction coefficient		0.05～0.20	0.06～0.16
最高PV值 $N/mm^2 \cdot m/s$ Max PV Value Limit	脂润滑 Grease lubrication	2.8	2.8
	油润滑 Oil lubrication	10	10
适用条件 Using Conditions		很高的耐疲劳强度和承载能力，抗冲击能力强，耐磨性、耐腐蚀性好 High resistance to fatigue strenth and load capacity, with high shock resistance good wearing and good corrosion resisitance.	较高的耐疲劳强度和承载能力、较好的滑动性能，易受润滑油腐蚀 Good resistance to fatigue strength and high load capacity,good performance of sliding, liable to be corrupted by lubricationg oil.
适用场合 Use Occasions		中速、高冲击载荷的衬套，内燃机连杆活塞销衬套 Fit for middle load, high speed, bushes,washer and connecting rod bearing in internal combustion engine used in machinical equipment and high shock bushing.	中载中速、高速内燃机主轴套和连杆轴套 middle load middle speed, principle axis of internal combustion engine.

5621 Solid-lubricant Bushes 固体润滑轴套

5622 Bimetal Bearing 双金属轴承

5621 is a kind of steel-lead bronze alloys based bearing, which is embedded with particular formulation of solid lubricants. Owing to the high strength, high load capacity and the spirally distributed diamond type of the embedded solid lubricant, the high temperature resistant action as extraordinary exploited. The lubrication area of the bearing surface is being about 25%. This type of bearing is particularly applied in starting motor for automobiles, generators cranes and those machines inmetallurgical industry.

5621固体润滑轴承是以5620双金属材料为基体，再埋入特殊固体润滑剂制作成的新型滑动轴承。由于高强度承载的合金材料作基体，并经过严格选择的高分子填充材料为耐磨剂，合理的螺旋角度菱形块状均布的润滑面，润滑面积达25%，因此，能发挥超群的低摩擦，良好的润滑性和抗磨耗性免除加油。该产品已广泛应用于起重起、微型电机、升降机、吊车及冶金机械等行业。

Standard Size:
Stright Bearing , Flange Bearing .

Non-Standard Size:
Stright Bearing, Flange Bearing, Thrust washer, Strip, Bearing bushing, Wear strips,

Steel combine units.

可供标准产品:
直套，翻边轴套。

可供非标产品:
直套，翻边轴套，止推垫片，板材，轴瓦，滑板，钢套组合件。

Technical Data 技术参数

最大承载 Max.load	静承载 Static	150N/mm^2
	动承载 Dynamic	40N/mm^2
最大PV值（干摩擦） Max. PV (dry running)		2.8N/mm^2·m/s
使用温度 Temp. limit		-100°C~+200°C
摩擦系数 Friction coefficient		0.06~0.25μ
最大线速度 Max. speed	脂润滑 Grease Lubrication	1.5m/s
导热系数 Thermal conductivity		58W(m·k)$^{-1}$
线胀系数 Coefficient of thermal expansion		18×10^{-6}·K^{-1}
硬度 Hardness		HB110-150
抗拉强度 Tensile strength		450N/mm^2
伸长 Elongation		40%

5622 is a bimetal bearing with steel as backing and sintered CuPb24Sn24 as lining layer. This type has fairly good performance in anti-fatigue and load capacity. It is suitable for middle speed and middle load. When over plated certain soft alloy, it can be applied in high-speed internal combustion engine and as connect rod.

5622双金属轴承，是以钢板为基体,表面烧结CuPb24Sn4材料的产品。该产品具有较好的疲劳强度和承载能力。适用于中速中载，有油润滑的场合表面镀软合金时，可用作高速内燃机轴承、连杆衬套，达到良好的耐磨、耐疲劳效果。

Standard Size:
Stright Bearing , Flange Bearing .

Non-Standard Size:
Stright Bearing, Flange Bearing, Thrust washer, Strip, Bearing bushing, Wear strips,

Steel combine units.

可供标准产品:
直套，翻边轴套。

可供非标产品:
直套，翻边轴套，止推垫片，板材，轴瓦，滑板，钢套组合件。

Technical Data 技术参数

最大承载 Max.load		130N/mm^2
允许最大PV值 PV Limit V max(oil)	脂 Greses	2.8N/mm^2·m/s
	油 Oil	10N/mm^2·m/s
最高使用温度 Temperature Max		170°C
摩擦系数 Friction coefficient		0.06~0.16μ
最大线速度 Max. speed	油 Oil	10m/s
合金层硬度 Liner hardness		HB45~70
抗拉强度 Tensile strength		150N/mm^2

5620
5621
5622

Bimetal Sleeve Bushing Specification & Tolerance
双金属轴承规格及公差

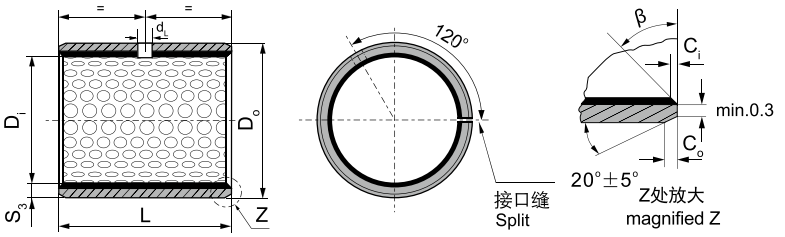

内外倒角 ID and OD chamfers

S_3	C_o	C_i	β
0.75	0.5±0.3	0.25±0.2	35°±5°
1.00	0.6±0.3	0.30±0.2	35°±5°
1.50	0.7±0.3	0.50±0.3	35°±5°

S_3	C_o	C_i	β
2.00	1.2±0.4	0.50±0.3	35°±5°
2.50	1.8±0.6	0.60±0.3	45°±5°

单位unit:mm

5620 Bimetal Sleeve Bushing Specification & Tolerance
5620 双金属轴承规格及公差

内径 D_i ϕd	10	12	14	15	16	18	20	22	14	15	16	18	30	32	35	38	40
外径 D_O ϕD	12	14	16	17	18	20	23	25	27	28	30	32	34	36	39	42	44
轴径(h8) Shaft D_s	10	12	14	15	16	18	20	22	14	15	16	18	30	32	35	38	40
	-0.000 -0.022	-0.000 -0.027					-0.000 -0.033							-0.000 -0.039			
座孔(H7) Housing D_H	12	14	16	17	18	20	23	25	27	28	30	32	34	36	39	42	44
	+0.018 +0.000					+0.021 +0.000						+0.025 +0.000					
压装后 内孔公差 Arter fixed $D_{i,a}$	+0.148 +0.010					+0.161 +0.020						+0.185 +0.040					
壁厚 Wall thickness S_3	1.0 -0.005 -0.065						1.5 -0.010 -0.070				2.0 -0.020 -0.080						
配合间隙 Clearance C_D	0.170 0.010	0.175 0.010					0.194 0.020					0.218 0.040		0.224 0.040			
油孔 Oil hole d_L	4							6								8	
10	●	●	●	●	●	●	●	●	●								
15	●	●	●	●	●	●	●	●	●	●	●	●	●	●			
20	●	●	●	●	●	●	●	●	●	●	●	●	●	●	●	●	●
25						●	●	●	●	●	●	●	●	●	●	●	●
30									●	●	●	●	●	●	●	●	●
40												●	●	●	●	●	●
50															●	●	●

5620
5621
5622

Bimetal Sleeve Bushing Specification & Tolerance
双金属轴承规格及公差

HDB®

5620 Bimetal Sleeve Bushing Specification & Tolerance
5620 双金属轴承规格及公差

内径 D_i ϕd	45	50	55	60	65	70	75	80	85	90	95	100	105	110	115	120	125	130	135	140	150
外径 D_O ϕD	50	55	60	65	70	75	80	85	90	95	100	105	110	115	120	125	130	135	140	145	155
轴径(h8) Shaft D_s	45	50	55	60	65	70	75	80	85	90	95	100	105	110	115	120	125	130	135	140	150
	-0.000 -0.039					-0.000 -0.046						-0.000 -0.054							-0.000 -0.063		
座孔(H7) Housing D_H	50	55	60	65	70	75	80	85	90	95	100	105	110	115	120	125	130	135	140	145	155
	+0.025 +0.000			+0.030 +0.000							+0.035 +0.000								+0.040 +0.000		
压装后 内孔公差 Arter fixed $D_{i,a}$	+0.225 +0.080			+0.230 +0.080							+0.235 +0.080								+0.240 +0.080		
壁厚 Wall thickness S_3	2.5 -0.040 -0.100																				
配合间隙 Clearance C_D	0.264 0.080	0.269 0.080	0.276 0.080					0.281 0.080	0.281 0.080								0.303 0.080				
油孔 Oil hole d_L	8						9.5														
25	●																				
30	●	●	●	●	●	●	●	●	●												
40	●	●	●	●	●	●	●	●	●	●											
50	●	●	●	●	●	●	●	●	●	●	●	●	●	●	●	●					
60		●	●	●	●	●	●	●	●	●	●	●	●	●	●	●	●	●	●	●	●
80						●	●	●	●	●	●	●	●	●	●	●	●	●	●	●	●
90								●	●	●	●	●	●	●	●	●	●	●	●	●	●
100									●	●	●	●	●	●	●	●	●	●	●	●	●

Order 订购

Catalog No. 目录号	.	D_i	.	D_O	.	L
5620	.	020	.	023	.	020
5621	.	020	.	023	.	020
5622	.	020	.	023	.	020

5640

Bimetal Flange Bushing Specification & Tolerance
双金属翻边轴承规格及公差

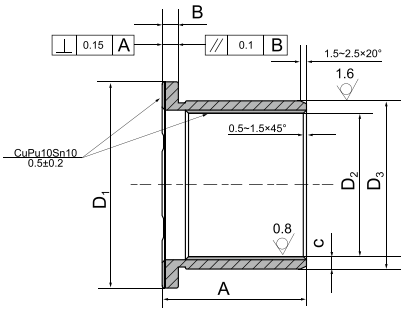

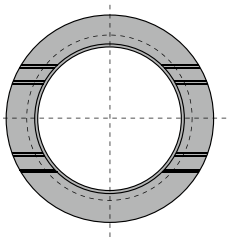

单位unit:mm

5640 Bimetal Flange Bushing Specification & Tolerance 5640 双金属翻边轴承规格及公差																								
D_1	42	43	44	47	48	52	55	55	55	60	60	63	65	68	70	70	72	72	75	77	83	85	87	87
B	3.5	2	3.5	3.5	2	3	3.5	3.5	3.5	3	3	3.5	3.5	3.5	3.5	3.5	3.5	3.5	3.5	3	3.5	3.5	3.5	3.5
D_3	37	34	39	39	39	41	42	45	45	41	46	47	52	54	54	57	57	57	57	60	66	65	67	67
D_2	30	30	32	32	35	35	35	38	38	35	40	40	45	47	47	50	50	50	50	54	59	58	60	60
A	30	28	35	50	37	35	35	35	40	42	62	40	40	35	40	48	45	50	50	55	53	60	53	60
C	3.5	2	3.5	3.5	2	3	3.5	3.5	3.5	3.5	3.5	3.5	3.5	3.5	3.5	3.5	3.5	3.5	3.5	3	3.5	3.5	3.5	3.5

单位unit:mm

5640 Bimetal Flange Bushing Specification & Tolerance 5640 双金属翻边轴承规格及公差																								
D_1	87	87	94	87	87.5	88	88	92	93	94	95	95	97	97	100	103	105	105	107	115	128	108	108	108
B	3.5	4	3.5	3.5	1.95	3.5	3.5	3.5	3.5	3.5	3.5	4	3.48	3.5	5	3.525	3.5	3.5	4	5	3.8	3.5	3.5	5
D_3	67	68	72	72	69.12	67	72	77	75	77	77	78	77.14	82	85	70.8	82	87	83	100	92.6	72	77	80
D_2	60	60	65	65	65.22	60	65	70	68	70	70	70	70.18	75	75	63.75	75	80	75	90	85	65	70	70
A	65	60	60	65	64.5	60	65	67	60	70	65	70	62	74	70	73	75	70	74	75	103	75	98	90
C	3.5	4	3.5	3.5	2	3.5	3.5	3.5	3.5	3.5	3.5	4	3.5	3.5	5	3.5	3.5	3.5	4	5	4	3.5	3.5	5

Order 订购

Catalog No. 目录号	.	D_2	.	A
5640	.	030	.	030

5120

Bronze-Wrapped Bushes
青铜卷制轴套

5120 serie bronze rolled bushing is our new generation bushing based upon steel-bronze lead double metal bushings. This product is widely applied overseas. With the increase of our country's bring-in of foreign machineries, designers requirement on new abrasive materials and bushings are accordingly increasing. Therefore, our products have a wide application scope and practical value in machinery production.

The major feature of 5120 serie bushing is their thin-wall structure, which doesn't take up too large assembly space. Specially formulated high-density bronze alloy bands are used for the building of the bushing, which compared with traditional bushings, is featured in the high density, no shrinkage blowholes, high load sustainability and anti-wearing and anti-fatigue. The production of the bushing is by means of advanced fixture and molds, able to make oil holes, hole dents and grooves on the frication surfaces of the bands to suit various engineering applications, making it possible for the bushing to store large amount of lubricating grease when working. Therefore, the lubrication interval is prolonged and the service hours are effectively lengthened.

5120 serie bearings are widely used in applications such as agricultural machineries, construction machineries, engineering machineries and automobile industry.

5120 系列青铜卷制轴承套是我公司在钢-铜铅双金属轴套产品基础上开发设计的新一代轴套。该产品在国外应用十分普遍，随着我国引进机械的设备新机种的日益增多，设计师们寻找新型摩擦材料、轴套的要求也日益需要，因此该产品在我们机械制造中有着宽广应用领域和实用价值。

5120系列轴套最大特点是薄壁结构，不占据很大的装配空间。轴套材料采用特殊配方高密度铜合金带材。它与传统的铺型铜套相比，具有密度高，无气缩孔、承载能力大，又有耐磨耐疲劳等优点。轴套制造采用先进的工装模具，可在带材摩擦面上加工出适用各种工程条件的油穴、油坑、油槽，从而使轴套在使用可储存大量润滑油脂，延长加油间隔时间，有效的提高了使用寿命。

5120系列轴承广泛应用于农业机械、建筑机械、工程机械、汽车行业等。

Product Benefits 产品优点

1. Saving large amount of bronze material and save the working hours normally spent for lathing the bronze bushing.
2. Compared with lathed bushings and roller bearings, it is light in weight and more cost-effective.
3. Various holes and dents can be made on the frication surface for grease storage, prolonging the lubrication interval to 5 times as long as required by the bronze bushing.
4. Extremely high load sustainability, especially suitable for coarse abrasion surfaces.

1. 节约大量铜材、节省车制铜套工时；
2. 与车制轴套、滚动轴承相比其重量轻、成本低；
3. 可在摩擦面加工出各种有穴、有坑、储存一定油脂，延长加油的时间是铜套的5倍；
4. 极高的承载能力，特别是适用于粗糙的摩擦面；

Standard Size：
Stright Bearing P20, Flange Bearing P22.

Non-Standard Size：
Stright Bearing, Flange Bearing, Thrust washer, Strip, Bearing bushing, Wear strips, Steel combine units.

可供标准产品：
直套，翻边轴套。

可供非标产品：
直套，翻边轴套，止推垫片，板材，轴瓦，滑板，钢套组合件。

5120

Bronze-Wrapped Bushes
青铜卷制轴套

Application scope 应用范围

此系列轴承广泛应用于农用、建设机械以及工程机械等。

This serie of bearing is widely applied to agricultural, construction and engineering machineries, etc.

油穴类别(依据 DIW1494/ISO3457)。

Categories of oil holes (As per to DIW1494/ISO3457)。

Material Structure 材料结构

High-density bronze is rolled into shape or oil bags and oil holes specially integrated into the inner surface to reduce the wearing and prolong the service hours. Besides, it has excellent anti-corrosion functions.

采用高密度青铜卷制成形或球形油袋、油穴特殊合成内部表面以减少磨损延长使用时间并且很好的做到防腐功能。

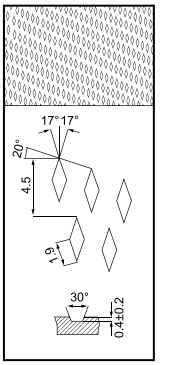

轴衬套内
Inside the bush of the shaft
菱形油穴r≤φ22
Rhomb oil holes r≤φ22

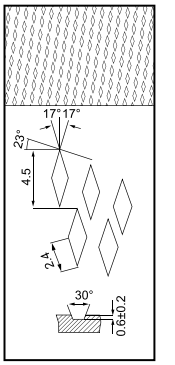

轴衬套内
Inside the bush of the shaft
菱形油穴r>φ22
Rhomb oil holes r>φ22

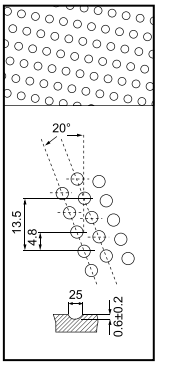

形成圆形
Forming a circle

Chemical Composition 化学成分

材料 Material: CuSn8P	铜 Cu	锡 Sn	磷 P
	余量	7-8	0.1-0.4

Physical Property 物理特性

型号 Type	密度 Density	散热热涨 Heat Emission and Expansion	热传导 Heat Conducting	硬度 Hardness	抗压强度 Compression strength	延伸率 Extensile
5120	8.8g/cm^3	18.5×10^{-6}×K^{-1}	58W(m·k)	90~150HB	470N/mm^2	40%

Standard tolerance for bushes (As per to DIW W91/1503547)
标准衬套公差 (依据 DIW W91/1503547)

标准直径 Standard Dia.	衬套外径尺寸 O.D.Size	相配座孔 Housing Bore	衬套内径尺寸 I.D.Size	相配轴径 Axle
10~18	+0.065 +0.030	+0.018 0	+0.046 0	- 0.016 - 0.043
18~30	+0.075 +0.035	+0.021 0	+0.052 0	- 0.020 - 0.020
30~50	+0.085 +0.045	+0.025 0	+0.062 0	- 0.025 - 0.064
50~80	+0.100 +0.055	+0.030 0	+0.074 0	- 0.030 - 0.076
80~120	+0.120 +0.070	+0.035 0	+0.087 0	- 0.036 - 0.090
120~180	+0.170 +0.100	+0.400 0	+0.100 0	- 0.043 - 0.106
180~250	+0.210 +0.130	+0.046 0	+0.115 0	- 0.050 - 0.122
250~315	+0.260 +0.170	+0.052 0	+0.130 0	- 0.056 - 0.137

5131

Bronze-Wrapped Bushes
青铜卷制轴套

5131 serie bronze rolled bushing is our new generation bushing based upon steel-bronze lead double metal bushings. It has same structure with 5120. We based on the same type of overseas products and make further development to produce. The design has be improved and can make a replacement of original one and cut down the cost. Therefore, our products have a wide application scope and practical value in machinery production.

The major feature of 5131 serie bushing is their thin-wall structure, which doesn't take up too large assembly space. Specially formulated high-density bronze alloy bands are used for the building of the bushing, which compared with traditional bushings, is featured in the high density, no shrinkage blowholes, high load sustainability and anti-wearing and anti-fatigue. The production of the bushing is by means of advanced fixture and molds, able to make oil holes, hole dents and grooves on the frication surfaces of the bands to suit various engineering applications, making it possible for the bushing to store large amount of lubricating grease when working. Therefore, the lubrication interval is prolonged and the service hours are effectively lengthened.

5131 serie bearings are widely used in applications, such as agricultural machineries, construction machineries, engineering machineries and automobile industry.

5131系列青铜卷制轴承是与5120材料结构相同，我单位根据国外同类产品基础上开发出的新一代产品轴套，能改良产品设计、替代原有铜套,能降低采购成本，因此产品在我们机械制造中有着广泛实用价值和应用领域。

5131系列轴套最大特点是薄壁结构，不占据很大的装配空间。轴套材料采用特殊配方高密度铜合金带材。它与传统的铺型铜套相比，可在带材摩擦面上加工出适用各种工程条件的油穴、油坑、油槽，排列润滑通孔，从而使轴套在使用可储存大量润滑油脂，延长加油间隔时间，有效的提高了使用寿命。

5131系列轴承广泛应用于农业机械、建筑机械、工程机械、高载低速场合等。

Product Benefits 产品优点

1. Saving large amount of bronze material and save the working hours normally spent for lathing the bronze bushing.
2. Compared with lathed bushings and roller bearings, it is lights and more cost-effective.
3. Various holes and dents can be made on the frication surface for grease storage, prolonging the lubrication interval to 5 times as long as required by the bronze bushing.
4. Extremely high load sustainability, especially suitable for coarse abrasion surfaces.

1. 节约大量铜材、节省车制铜套工时：
2. 与车制轴套、滚动轴承相比其重量轻、成本低；
3. 可在摩擦面加工出各种有穴、有坑、储存一定油脂，延长加油的时间是铜套的5倍；
4. 极高的承载能力，特别是适用于粗糙的摩擦面；

Standard Size：
Stright Bearing , Flange Bearing .

Non-Standard Size：
Stright Bearing, Flange Bearing, Thrust washer, Strip, Bearing bushing, Wear strips, Steel combine units.

可供标准产品：
直套，翻边轴套。

可供非标产品：
直套，翻边轴套，止推垫片，板材，轴瓦，滑板，钢套组合件。

5131

Bronze-Wrapped Bushes
青铜卷制轴套

Material Structure 材料结构

High-density bronze is rolled into shape or oil bags and oil holes, specially integrated into the inner surface to reduce the wearing and prolong the service hours. Besides, it has excellent anti-corrosion functions.

采用高密度青铜卷制成形或球形油袋、油穴特殊合成内部表面以减少磨损延长使用时间并且很好的做到防腐功能。

Application scope 应用范围

This series of bearing is widely applied to agricultural, construction and engineering machineries, etc.此系列轴承广泛应用于农用、建设机械以及工程机械等。

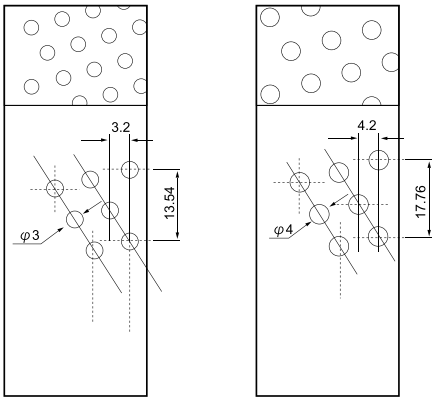

轴承内径r≤φ25
Inside Dia r≤φ25

轴承内径r＞φ25
Inside Dia r＞φ25

Chemical Composition 化学成分

材料 Material: CuSn8P	铜 Cu	锡 Sn	磷 P
	余量	7-8	0.1-0.4

Physical Property 物理特性

型号 Type	密度 Density	散热热涨 Heat Emission and Expansion	热传导 Heat Conducting	硬度 Hardness	抗压强度 Compression strength	延伸率 Extensile
5131	8.8g/cm^3	18.5×10^{-6}×K^{-1}	58W(m·k)	90~150HB	470N/mm^2	40%

Standard tolerance for bushes (As per to DIW W91/1503547)
标准衬套公差 (依据 DIW W91/1503547)

标准直径 Standard Dia.	衬套外径尺寸 O.D.Size	相配座孔 Housing Bore	衬套内径尺寸 I.D.Size	相配轴径 Axle
10~18	+0.065 +0.030	+0.018 0	+0.046 0	- 0.016 - 0.043
18~30	+0.075 +0.035	+0.021 0	+0.052 0	- 0.020 - 0.020
30~50	+0.085 +0.045	+0.025 0	+0.062 0	- 0.025 - 0.064
50~80	+0.100 +0.055	+0.030 0	+0.074 0	- 0.030 - 0.076
80~120	+0.120 +0.070	+0.035 0	+0.087 0	- 0.036 - 0.090
120~180	+0.170 +0.100	+0.400 0	+0.100 0	- 0.043 - 0.106
180~250	+0.210 +0.130	+0.046 0	+0.115 0	- 0.050 - 0.122
250~315	+0.260 +0.170	+0.052 0	+0.130 0	- 0.056 - 0.137

5135

Bronze-Wrapped Bushes
青铜卷制轴套

The same produce process and application with 5120, except overlay the solid lubricants into the diamond shaped lubrication indents on the bearing surface, which will offer good friction at the start and process works and keep good condition even no oil giving at short time. So it can be used in construction machines, gears, automotive clutch pads etc.

与5120具有相同的生产工艺及使用场合，其基体为青铜基板，在其菱形油穴内填充了以石墨为主的固体润滑剂，使产品在起始运用阶段及过程中能有更低的摩擦系数，在短时间断油的情况下任能保持良好的工作状态。因此被广泛使用在工程机械、齿轮箱传动部件、汽机车离合器等高载中速部位、户外高空设备的转动部位。

最大承载 Max.load	静承载 Static	120N/mm^2
	动承载 Dynamic	40N/mm^2
最大PV值（干摩擦） Max. PV (dry running)		2.8N/mm^2·m/s
使用温度 Temp. limit		-100°C~+200°C
摩擦系数 Friction coefficient		0.05~0.25μ
最大线速度 Max. speed	脂润滑 Grease Lubrication	2.5m/s
导热系数 Thermal conductivity		58W(m·k)$^{-1}$
线胀系数 Coefficient of thermal expansion		18.5×10^{-6}·K^{-1}
硬度 Hardness		HB＞110
抗拉强度 Tensile strength		450N/mm^2
伸长 Elongation		40%

公差 Tolerance

一般推荐座孔公差为H7，轴径公差为f7。

Recommend housing tolerance H7 and the shaft as f7.

Standard Size:

Stright Bearing , Flange Bearing .

Non-Standard Size:

Stright Bearing, Flange Bearing, Thrust washer, Strip, Bearing bushing, Wear strips, Steel combine units.

可供标准产品:

直套，翻边轴套。

可供非标产品:

直套，翻边轴套，止推垫片，板材，轴瓦，滑板，钢套组合件。

5130

Brass Bushing
黄铜卷制轴承

It is based on high density bronze material of special formula. The alloy surface is rolled to oil grooves or hole according to customer require. It has good load capacity and wear-resistant. The product is applied to vehicle, construction machinery and machine tool etc.

该产品是以特殊配方的黄铜材料为基体，表面可根据客户要求轧制油穴或油槽等，它有较高的承载压力，很好的耐磨性，产品运用于汽车、建筑机械、机床工业等。

性能指标 Performance Index	有关数据 Data
密度 Y Density Y	8.4 g/cm^3
抗压强度α_c Compression Strength	440N/mm^2
导热系数 Coefficient of Heat Conduction	71W/m·K
线膨胀系数α_1 Coefficient of Linear Expansion	19.2×10^{-6}/K
硬度 Hardness	80~110HB
延伸率 Elongation	30%
材料名称 Alloy Material	CuZn31Si

5120

Bronze Sleeve Bushing Specification & Tolerance
青铜轴套规格及公差

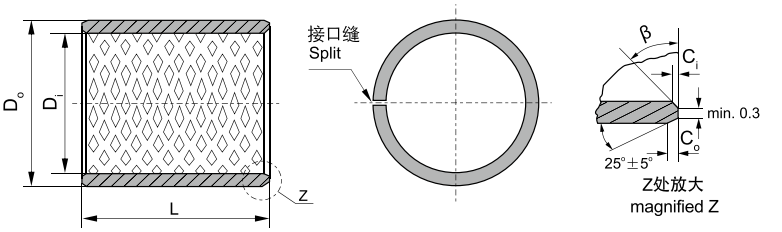

内外倒角 ID and OD chamfers

S_3	C_o	C_i	β
0.75	0.5±0.3	0.25±0.2	35°±5°
1.00	0.6±0.3	0.30±0.2	35°±5°
1.50	0.7±0.3	0.50±0.3	35°±5°

S_3	C_o	C_i	β
2.00	1.2±0.4	0.50±0.3	35°±5°
2.50	1.8±0.6	0.60±0.3	45°±5°

单位Unit: mm

5120 Bronze Sleeve Bushing Specification & Tolerance
5120 青铜轴套规格及公差

内径 D_i ϕd	10	12	14	15	16	18	20	22	24	25	28	30	32	35	40	45	50	55	60	65	70	75	80	85	90	95	100	105	110	115
外径 D_o ϕD	12	14	16	17	18	20	23	25	27	28	31	34	36	39	44	50	55	60	65	70	75	80	85	90	95	100	105	110	115	120
10	●	●	●	●	●	●	●	●																						
15	●	●	●	●	●	●	●	●	●	●	●	●	●	●																
20	●	●	●	●	●	●	●	●	●	●	●	●	●	●	●	●	●	●												
25			●	●	●	●	●	●	●	●	●	●	●	●	●	●	●	●	●											
30								●	●	●	●	●	●	●	●	●	●	●	●	●	●	●	●	●	●					
35												●	●	●	●	●	●	●	●	●	●	●	●	●	●					
40												●	●	●	●	●	●	●	●	●	●	●	●	●	●	●				
50															●	●	●	●	●	●	●	●	●	●	●	●	●	●	●	
60																	●	●	●	●	●	●	●	●	●	●	●	●	●	●
70																			●	●	●	●	●	●	●	●	●	●	●	●
80																					●	●	●	●	●	●	●	●	●	●
90																								●	●	●	●	●	●	●
100																										●	●	●	●	●

5120

Bronze Sleeve Bushing Specification & Tolerance
青铜轴套规格及公差

HDB®

5120 Bronze Sleeve Bushing Specification & Tolerance
5120 青铜轴套规格及公差

内径 D_i ϕd	120	125	130	135	140	145	150	155	160	165	170	175	180	185	190	195	200	205	215	225	230	240	250	260	270	280	290	300
外径 D_O ϕD	125	130	135	140	145	150	155	160	165	170	175	180	185	190	195	200	205	210	220	230	235	245	255	265	275	285	295	305
25																												
30																												
35																												
40																												
50																												
60	●	●	●	●	●	●	●	●	●	●	●	●	●	●	●	●	●	●	●	●	●	●	●	●	●	●	●	●
70	●	●	●	●	●	●	●	●	●	●	●	●	●	●	●	●	●	●	●	●	●	●	●	●	●	●	●	●
80	●	●	●	●	●	●	●	●	●	●	●	●	●	●	●	●	●	●	●	●	●	●	●	●	●	●	●	●
90	●	●	●	●	●	●	●	●	●	●	●	●	●	●	●	●	●	●	●	●	●	●	●	●	●	●	●	●
100	●	●	●	●	●	●	●	●	●	●	●	●	●	●	●	●	●	●	●	●	●	●	●	●	●	●	●	●

Order 订购

Catalog No. 目录号	.	D_i	.	D_O	.	L
5120	.	020	.	023	.	020

5141

Bronze Flange Bushing Specification & Tolerance
青铜翻边轴套规格及公差

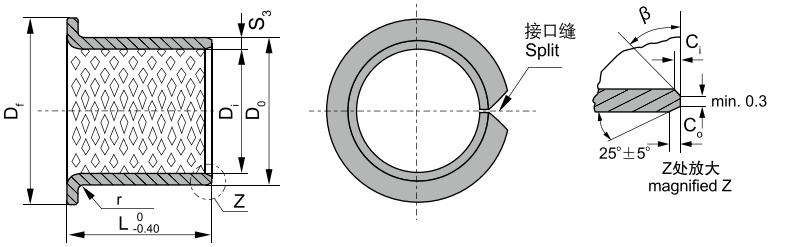

S_3	1.0	1.5	2.0	2.5
r	$1^{-0.5}$	1±0.5	1.5±0.5	2±0.5

单位Unit: mm

5141 Bronze Flange Bushing Specification & Tolerance
5141 青铜翻边轴套规格及公差

内径 D_i Φd	25	30	35	40	45	50	55	60	65	70	75	80	90	100	110	120	130	140	150	160	170	180	190	200	225	250	265	285	300
外径 D_o Φd	28	34	39	44	50	55	60	65	70	75	80	85	95	105	115	125	135	145	155	165	175	185	195	205	230	255	270	290	305
法兰外径 D_{fl}	35	45	50	55	60	65	70	75	80	85	90	100	110	120	130	140	155	165	180	190	200	215	225	135	260	290	305	325	340
15	●																												
20	●	●	●																										
25	●	●	●	●																									
30		●	●	●	●	●	●	●	●																				
35			●	●	●	●	●	●	●	●	●	●																	
40				●	●	●	●	●	●	●	●	●																	
50					●	●	●	●	●	●	●	●	●	●	●	●													
60								●	●	●	●	●	●	●	●	●	●	●	●	●	●	●	●	●	●	●	●	●	●
70										●	●	●	●	●	●	●	●	●	●	●	●	●	●	●	●	●	●	●	●
80												●	●	●	●	●	●	●	●	●	●	●	●	●	●	●	●	●	●
90													●	●	●	●	●	●	●	●	●	●	●	●	●	●	●	●	●

Order 订购

Catalog No. 目录号	.	D_i	.	L
5140	.	025	.	015

5131

Bronze Sleeve Bushing Specification & Tolerance
青铜轴套规格及公差

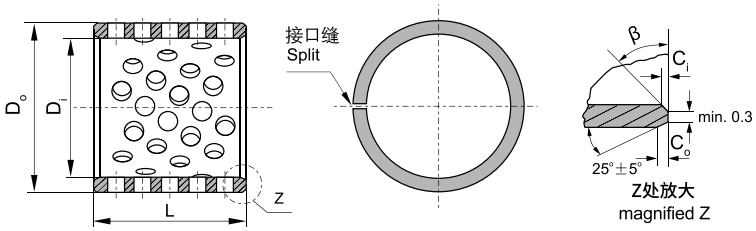

内外倒角 ID and OD chamfers

S_3	C_o	C_i	β
0.75	0.5±0.3	0.25±0.2	35°±5°
1.00	0.6±0.3	0.30±0.2	35°±5°
1.50	0.7±0.3	0.50±0.3	35°±5°

S_3	C_o	C_i	β
2.00	1.2±0.4	0.50±0.3	35°±5°
2.50	1.8±0.6	0.60±0.3	45°±5°

单位Unit: mm

5131 Bronze Sleeve Bushing Specification & Tolerance
5131 青铜轴套规格及公差

内径 D_i Φd	10	12	14	15	16	18	20	22	24	25	28	30	32	25	40	45	50	55	60	65	70	75	80	85	90	95	100	105
外径 D_o Φd	12	14	16	17	18	20	23	25	27	28	31	34	36	39	44	50	55	60	65	70	75	80	85	90	95	100	105	110
10	●	●	●	●	●	●	●	●																				
15	●	●	●	●	●	●	●	●	●	●	●	●	●	●														
20	●	●	●	●	●	●	●	●	●	●	●	●	●	●	●	●	●	●										
25			●	●	●	●	●	●	●	●	●	●	●	●	●	●	●	●	●									
30								●	●	●	●	●	●	●	●	●	●	●	●	●	●	●	●	●	●			
35												●	●	●	●	●	●	●	●	●	●	●	●	●	●			
40												●	●	●	●	●	●	●	●	●	●	●	●	●	●	●		
50															●	●	●	●	●	●	●	●	●	●	●	●	●	●
60																	●	●	●	●	●	●	●	●	●	●	●	●
70																			●	●	●	●	●	●	●	●	●	●
80																					●	●	●	●	●	●	●	●
90																								●	●	●	●	●
100																										●	●	●

5131

Bronze Sleeve Bushing Specification & Tolerance
青铜轴套规格及公差

HDB®

5131 Bronze Sleeve Bushing Specification & Tolerance
5131 青铜轴套规格及公差

内径 D_i Φd	110	115	120	125	130	135	140	145	150	155	160	165	170	175	185	185	190	195	200	205	215	225	230	240	250	260	270	280	290	300
外径 D_o Φd	115	120	125	130	135	140	145	150	155	160	165	170	175	180	185	190	195	200	205	210	220	230	235	245	255	265	275	285	295	305
25																														
30																														
35																														
40																														
50	●	●																												
60	●	●	●	●	●	●	●	●	●	●	●	●	●	●	●	●	●	●	●	●	●	●	●	●	●	●	●	●	●	●
70	●	●	●	●	●	●	●	●	●	●	●	●	●	●	●	●	●	●	●	●	●	●	●	●	●	●	●	●	●	●
80	●	●	●	●	●	●	●	●	●	●	●	●	●	●	●	●	●	●	●	●	●	●	●	●	●	●	●	●	●	●
90	●	●	●	●	●	●	●	●	●	●	●	●	●	●	●	●	●	●	●	●	●	●	●	●	●	●	●	●	●	●
100	●	●	●	●	●	●	●	●	●	●	●	●	●	●	●	●	●	●	●	●	●	●	●	●	●	●	●	●	●	●

Order 订购

Catalog No. 目录号	.	D_i	.	D_o	.	L
5131	.	020	.	023	.	020

5141

Bronze Flange Bushing Specification & Tolerance
青铜翻边轴套规格及公差

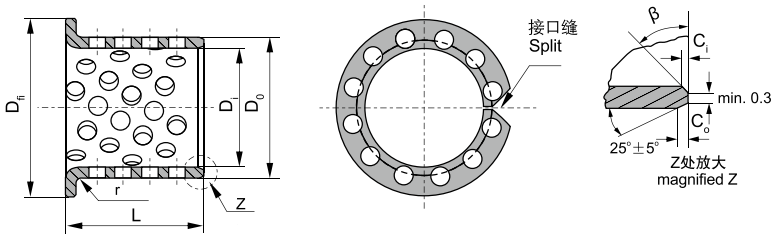

S_3	1.0	1.5	2.0	2.5
r	$1^{-0.5}$	1±0.5	1.5±0.5	2±0.5

单位Unit: mm

5141 Bronze Flange Bushing Specification & Tolerance
5141 青铜翻边轴套规格及公差

内径 D_i Φd	25	30	35	40	45	50	55	60	65	70	75	80	90	100	110	120	130	140	150	160	170	180	190	200	225	250	265	285	300
外径 D_o Φd	28	34	39	44	50	55	60	65	70	75	80	85	95	105	115	125	135	145	155	165	175	185	195	205	230	255	270	290	305
法兰外径 D_{fl}	35	45	50	55	60	65	70	75	80	85	90	95	110	120	130	140	165	165	180	190	200	215	225	235	260	290	305	325	340
15	●																												
20	●	●	●																										
25	●	●	●	●																									
30		●	●	●	●	●	●	●	●																				
35			●	●	●	●	●	●	●	●	●	●																	
40				●	●	●	●	●	●	●	●	●																	
50					●	●	●	●	●	●	●	●	●	●	●	●													
60								●	●	●	●	●	●	●	●	●	●	●	●	●	●	●	●	●	●	●	●	●	●
70										●	●	●	●	●	●	●	●	●	●	●	●	●	●	●	●	●	●	●	●
80												●	●	●	●	●	●	●	●	●	●	●	●	●	●	●	●	●	●
90													●	●	●	●	●	●	●	●	●	●	●	●	●	●	●	●	●

Order 订购

Catalog No. 目录号	.	D_i	.	L
5141	.	025	.	015

HDB-10/20/30 系列

无给油轴承 / 边界润滑轴承 / 塑料轴承

Oilless Bushings / Boundary-Lubrication Bushings / Plastic bearing

Directory 目录

10 无给油轴承

Oilless Bushings

20 边界润滑轴承

Boundary-Lubrication Bushings

30 塑料轴承

Plastic bearing

5220

Carbon Steel Self-lubricating Bushes
碳钢基自润滑轴套

5220 carbon steel self-lubricating bearings, used high quality low-carbon steel plate as base, sintered porous bronze as its interlayer and the compound of PTFE as its surface. It offers the property of good self-lubrication, low wear, low friction, good sliding characteristics, low noise.

该产品以优质低碳钢为基体，中间烧结球形青铜层，表面轧制聚四氟乙烯(PTFE)的混合物。它具有较好的自润滑、耐磨损、摩擦系数低、走合性能好、低噪音等性能，产品广泛应用于各种机械的滑动部位。

应用特点 Application Feature

1. Working under oilless or minim oil state, maintenance free or just need a little maintenance.
2. Resist Abrasion, low coefficient of friction long operating life.
3. Operating in -195°C～+280°C. 4. Good mending, low-noise, non-pollution.
5. Thin-walled structure, light in weight, which can reduce the machine to small size.
6. Forming a transferred film during operation to protect shaft and trouble free. 7. Low demand to the shaft even no surface hardness treatment, which lower the cost of the mating components. 8. No absorption to water/oil, small coefficient of Thermal emption, good thermal conductivity and size stability. 9. The back of the steel strip can be plated with various metals, anti-corrosion. The products have been used in sliding components of different machines, such as auto machines, piston pump, gear pump, textile machine, auto-sides machine, Injection Machine, sports Machine office equipment etc.

1. 无油润滑或少油润滑，适用于无法加油或较难加油的场合，可以在使用时不保养或少保养；
2. 耐磨性能好，摩擦系数小，使用寿命长； 3. 可在-195°C～+280°C范围内使用；
4. 走合性能好，低噪音，无污染； 5. 薄壁结构，质量轻，可缩小机械体积；
6. 在运作时能形成转移膜，起到保护对磨轴的作用，无咬轴现象；
7. 对磨轴的硬度要求低，未经调质处理的轴都可使用，从而降低了相关零件的加工难度；
8. 无吸水、吸油性，热膨胀系数小，散热性好，尺寸稳定；
9. 钢背面可电镀多种金属，因此可在腐蚀性介质中使用，不会生锈；

目前已广泛应用于各种机械的滑动部位，如自动化机械设备(伸缩、摇摆、滑动、弯曲、回旋、回转部位)油压气缸导套、齿轮泵、纺织机械、自动售货机、塑胶成型机、压铸机、橡胶机械、烟草机、健身器材、办公机械、液压搬运车、汽机车、摩托车、农林机械等。

材料组织 Material Structure

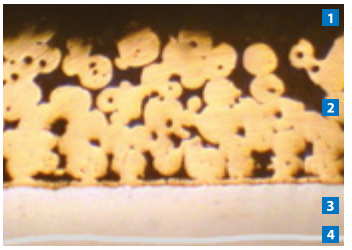

1.PTFE with mixture 0.01~0.03mm
2.Porous bronze 0.2~0.3mm
3.Steel backing 0.7~2.3mm
4.Tin-plating 0.005mm or copper plating 0.008mm
1.聚四氟乙烯与铅混合物0.01-0.03mm
2.球形青铜粉0.2-0.3mm
3.钢背0.7-2.3mm
4.电镀层:镀锡层厚0.005mm，或镀铜层厚0.008mm

Standard Size:
Straight sleeves, flanged bushings, thrust washers, plates.

Non-Standard Size:
Stright Bearing, Flange Bearing, Thrust washer, Strip, Bearing bushing, Wear strips, Steel combine units.

可供标准产品:
直套，翻边轴套，止推垫片，板材。

可供非标产品:
直套，翻边轴套，止推垫片，板材，轴瓦，滑板，钢套组合件。

技术参数 Technical Data

最大承载 Max.load	静承载 Static	250N/mm^2
	低速运转 Very low speed	140N/mm^2
	旋转、摇摆运动 Roatating oscillating	60N/mm^2
最大PV值（干摩擦）Max. PV (dry running)	间断性运作 Short-term operation	3.6N/mm^2·m/s
	长期运作 Continuous operation	1.8N/mm^2·m/s
使用温度 Temp. limit		-195°C~+280°C
摩擦系数 Friction coefficient		0.05~0.20μ
最大线速度 Max. speed	干摩擦 Dry running	2m/s
	流体润滑 Hydrodynamic operation	>2m/s
导热系数 Thermal conductivity		42 W(m·k)$^{-1}$
线胀系数 Coefficient of thermal expansion		11×10^{-6}·K^{-1}

5920

Bronze Pb-free Self-lubricating Bushes
铜基无铅自润滑轴套

5920 is one of high safty factory, and particularly appropriate for high temperature environment where no oil is effcient and where the machine must be under successive long period working condition.

This is widely used in steel metallurgy industry such as bushes for roller grooves of successive casting machines. cement grouting pumps and screw converyers for cement. It can also be composed in steel housing or fabricated into Flanged bushes which can move both in radial and in axial directions.

It can be applied in bridge bearing plate because of thicker inner surface layer to arrive 130N/mm^2.

5920青铜基轴承，是以锡青铜为基体，中间烧结青铜球粉，表面轧制聚四氟乙烯(PTFE)和耐高温填充材料而成。它具有很高的安全系数，在连续工作不能停机修理的场所和高温不能加油的场所特别适用。目前已广泛应用在冶金钢铁工业，连铸机方坯滚道、高温炉炉前设备，水泥灌浆泵和螺旋式输送机上。它可以在外部组合钢套，也可以制成翻边，达到端面、内孔同时摩擦使用的效果。桥梁支座滑动部位，就是采用HLDB-1B耐磨层加厚的产品以取代纯PTFE板，达到130N/mm^{2}轴载使用的要求。

材料组织 Material Structure

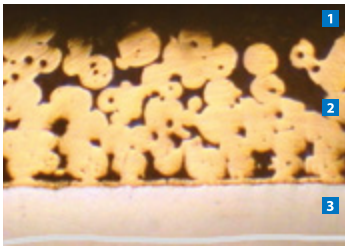

1.PTFE with Fiber 0.01~0.03mm
2.Porous bronze 0.2~0.3mm
3.Bronze backing 0.7~2.3mm1.
聚四氟乙烯与亲油性纤维混合物
0.01-0.03mm
2.球形青铜粉0.2-0.3mm
3.铜背0.7-2.3mm

Standard Size:

Stright Bearing, Flange Bearing, Thrust washer, Strip.

Non-Standard Size:

Stright Bearing, Flange Bearing, Thrust washer, Strip, Bearing bushing, Wear strips, Steel combine units.

可供标准产品:

直套，翻边轴套，止推垫片，板材。

可供非标产品:

直套，翻边轴套，止推垫片，板材，轴瓦，滑板，钢套组合件。

应用特点 Application Feature

1.PTFE and lipophilic Friber can protect the shaft,while the machine in operation.
2.Bronze have good thermal conductivity, it'll divert heat while the machine operating.
3.It can be applied in the machine, working long time, which examine and repair is incapable, because the bronze can lubricate itself.
4.It is used in the feeble acid and alkali condition because of good anti-corrosion of bronze backing.
5.Good load capacity.
6.It is widely used in steel metallurgy industry, such as bushes for foller grooves of successive casting machines, cement grouting pumps and scrow conveyers of machine.
7.It can be composed in steel housing, or fabricated into flanged bushes which result in function for montion both on flange and I.D.

1.聚四氟乙烯与亲油性纤维混合物在运动时可形成很好的转移膜保护对磨轴。
2.烧结层与铜基板具有良好的导热性，可迅速转移运作过程中产生的热量。
3.铜具有自润滑性能，可用于长期运作而无法停机检修的部位。
4.基体铜具有良好的抗腐蚀能力，可应用于弱酸、强碱场合。
5.具有良好的承载能力。
6.产品已广泛应用于冶金钢铁工业、高温炉钢环部位、水泥灌浆泵、螺旋式输送机、港口机械及船舶机械上等。
7.可在外部组合钢套；或制成翻边，达到内孔、端面同时使用的效果。

技术参数 Technical Data

最大承载 Max.load	静承载 Static	250N/mm^2
	低速运转 Very low speed	140N/mm^2
	旋转、摇摆运动 Roatating oscillating	60N/mm^2
最大PV值（干摩擦）Max. PV (dry running)	间断性运作 Short-term operation	3.6N/mm^2·m/s
	长期运作 Continuous operation	1.8N/mm^2·m/s
使用温度 Temp. limit		-195°C~+280°C
摩擦系数 Friction coefficient		0.03~0.20μ
最大线速度 Max. speed	干摩擦 Dry running	2m/s
	流体润滑 Hydrodynamic operation	>2m/s
导热系数 Thermal conductivity		60 W(m·k)$^{-1}$
线胀系数 Coefficient of thermal expansion		18×10^{-6}·K^{-1}

5220
5920

Sleeve Bushing Specification & Tolerance
轴套规格及公差

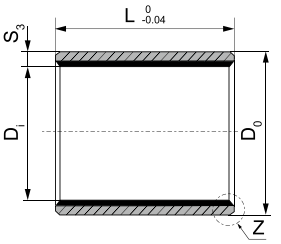

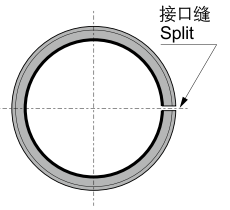

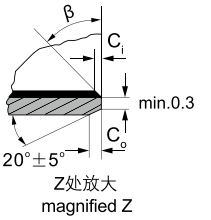

内外倒角 ID and OD chamfers

S_3	C_o	C_i	β
0.75	0.5±0.3	0.25±0.2	30°±5°
1.00	0.6±0.3	0.30±0.2	30°±5°
1.50	0.7±0.3	0.50±0.3	30°±5°

S_3	C_o	C_i	β
2.00	1.2±0.4	0.50±0.3	30°±5°
2.50	1.8±0.6	0.60±0.3	45°±5°

单位Unit: mm

5920 Sleeve Bushing Specification & Tolerance
5920 轴套规格及公差

轴径 (f7) Shaft Ds	6	8	10	12	13	14	15	16	17	18	20	22	24	25	28	30	32	35	38	40	45	50	55	60
	-0.010 -0.022	-0.013 -0.028					-0.016 -0.034						-0.020 -0.041					-0.025 -0.050			-0.050 -0.025		-0.060 -0.030	
座孔 (H7) Housing DH	8	10	12	14	15	16	17	18	19	20	23	25	27	28	32	34	36	39	42	44	50	55	60	65
	+0.015 +0.000				+0.018 +0.000						+0.021 +0.000							+0.025 +0.000					+0.030 +0.000	
(OD) 外径公差 Tolerance DO	8	10	12	14	15	16	17	18	19	20	23	25	27	28	32	34	36	39	42	44	50	55	60	65
	+0.055 +0.025				+0.065 +0.030						+0.075 +0.035							+0.085 +0.045					+0.100 +0.055	
(ID) 压装后内孔公差 After fixed Di,a	6	8	10	12	13	14	15	16	17	18	20	22	24	25	28	30	32	35	38	40	45	50	55	60
	+0.055 -0.010				+0.058 -0.010				+0.61 -0.010			+0.071 -0.010			+0.085 -0.010			+0.085 -0.010			+0.105 -0.010		+0.110 -0.010	
壁厚 Wall thickness S3	1.0 +0.005 -0.020										1.5 +0.005 -0.025				2.0 +0.005 -0.030						2.5 +0.005 -0.040			
配合间隙 Clearance DD	0.077 0.000	0.083 0.003	0.086 0.003	0.092 0.006					0.095 0.006		0.112 0.010				0.126 0.010		0.135 0.015				0.155 0.015	0.160 0.015	0.170 0.020	
6	●	●	●	●																				
8	●	●	●	●																				
10	●	●	●	●	●	●	●	●	●	●	●	●	●	●										
12		●	●	●	●	●	●	●	●	●	●	●	●	●	●	●	●	●	●	●				
15		●	●	●	●	●	●	●	●	●	●	●	●	●	●	●	●	●	●	●				
20			●	●	●	●	●	●	●	●	●	●	●	●	●	●	●	●	●	●	●	●		
25				●	●	●	●	●	●	●	●	●	●	●	●	●	●	●	●	●	●	●		
30											●	●	●	●	●	●	●	●	●	●	●	●	●	●
40														●	●	●	●	●	●	●	●	●	●	●
50														●	●	●	●	●	●	●	●	●	●	●
60																						●	●	●
70																								●
80																								
100																								
115																								

5220
5920

Sleeve Bushing Specification & Tolerance
轴套规格及公差

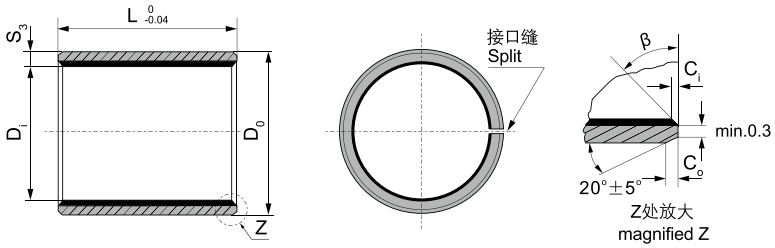

内外倒角 ID and OD chamfers

S_3	C_o	C_i	β
0.75	0.5±0.3	0.25±0.2	30°±5°
1.00	0.6±0.3	0.30±0.2	30°±5°
1.50	0.7±0.3	0.50±0.3	30°±5°

S_3	C_o	C_i	β
2.00	1.2±0.4	0.50±0.3	30°±5°
2.50	1.8±0.6	0.60±0.3	45°±5°

单位Unit: mm

5920 Sleeve Bushing Specification & Tolerance
5920 轴套规格及公差

轴径 (f7) Shaft Ds	65	70	75	80	85	90	95	100	105	110	120	125	130	140	150	160	180	190	200	220	250	260	280	300
	-0.060 -0.030			-0.013 -0.028	-0.000 -0.045	-0.000 -0.054					-0.000 -0.063						-0.000 -0.072					-0.000 -0.081		
座孔 (H7) Housing DH	70	75	80	85	90	95	100	105	110	115	125	130	135	145	155	165	185	195	205	225	255	265	285	305
	+0.030 +0.000			+0.035 +0.000							+0.040 +0.000						+0.046 +0.000				+0.052 +0.000			
(OD) 外径公差 Tolerance DO	70	75	80	85	90	95	100	105	110	115	125	130	135	145	155	165	185	195	205	225	255	265	285	305
	+0.100 +0.055								+0.120 +0.070								+0.210 +0.130				+0.260 +0.170			
(ID) 压装后 内孔公差 After fixed Di,a	65	70	75	80	85	90	95	100	105	110	120	125	130	140	150	160	180	190	200	220	250	260	280	300
	+0.110 -0.010			+0.155 +0.020					+0.155 +0.020		+0.210 +0.070						+0.216 +0.070				+0.222 +0.070			
壁厚 Wall thick- ness S3	2.5 +0.005 -0.040			2.5 -0.01 -0.060							2.5 -0.035 -0.085													
配合间隙 Clearance DD	0.170 0.020			0.201 0.020	0.209 0.020						0.264 0.070	0.273 0.070					0.279 0.070	0.288 0.070			0.294 0.070	0.030 0.070		
6																								
8																								
10																								
12																								
15																								
20																								
25																								
30	●	●	●																					
40	●	●	●	●	●	●																		
50	●	●	●	●	●	●	●	●																
60	●	●	●	●	●	●	●	●	●	●	●	●	●	●	●	●	●	●	●	●				
70	●	●	●	●	●	●	●	●	●	●	●	●	●	●	●	●	●	●	●	●				
80		●	●	●	●	●	●	●	●	●	●	●	●	●	●	●	●	●	●	●	●	●	●	●
100				●	●	●	●	●	●	●	●	●	●	●	●	●	●	●	●	●	●	●	●	●
115								●	●	●	●	●	●	●	●	●								

Order 订购

Catalog No. 目录号	.	D_i	.	D_o	.	L
5220	.	020	.	023	.	020
5920	.	020	.	023	.	020

5230

Flange Bushing Specifiction & Tolerance
翻边轴套规格及公差

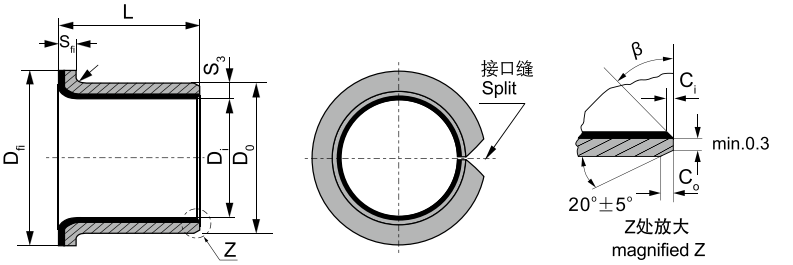

S_3	1.0	1.5	2.0	2.5
r	$1^{-0.5}$	1±0.5	1.5±0.5	2±0.5

单位Unit: mm

5230 Flange Bushing Specifiction & Tolerance
5230 翻边轴套规格及公差

轴径(f7) Shaft D_s	6	8	10	12	14	15	16	18	20	22	25	30	35	40
	-0.013 -0.028		-0.016 -0.034						-0.016 -0.034			-0.025 -0.050		
座孔(H7) Housing D_H	8	10	12	14	16	17	18	20	23	25	28	34	39	44
	+0.015 +0.000		+0.018 +0.000						+0.021 +0.000			+0.025 +0.000		
(OD) 外径公差 Tolerance D_O	8	10	12	14	16	17	18	20	23	25	28	34	39	44
	+0.055 +0.025			+0.065 +0.030					+0.075 +0.035				35.085 34.990	
(ID)压装后内孔公差 After fixed $D_{i,a}$	6	8	10	12	14	15	16	18	20	22	25	30	35	40
	+0.055 -0.010		+0.058 -0.010					+0.61 -0.010	+0.071 -0.010			+0.085 -0.010		
Wall thickness 壁厚 S_3	1.0 +0.005 -0.020								1.5 +0.005 -0.025			2.0 +0.005 -0.030		
配合间隙 Clearance C_O	0.077 0.000	0.083 0.003	0.086 0.003	0.092 0.006				0.095 0.006	0.112 0.010			0.126 0.010	0.135 0.015	
D1	6	8	10	12	14	15	16	18	20	22	25	30	35	40
D2	8	10	12	14	16	17	18	20	56	58	5/	67	39	55
D_{fl}±0.5	12	15	18	20	22	23	24	26	30	32	35	42	47	53
L±0.25	4 7	5.5 7.5	7 9 12	7 9 12	12 17	9 12 17	12 17	12 17 20	11.5 16.5 21.5	15 20	11.5 16.5 21.5	16 26	16 26	26 40
S_{fl}-0.2	1								1.5			2		

Order 订购

Catalog No. 目录号	.	D_i	.	L
5230	.	020	.	020

5210

Thrust Washer Specification & Tolerance
垫片规格及公差

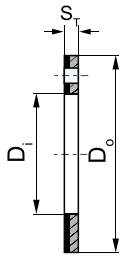

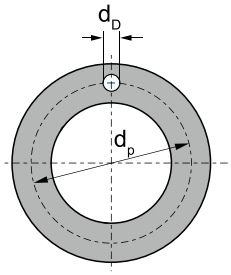

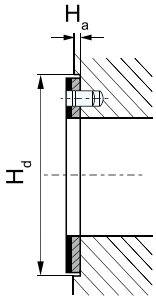

单位Unit: mm

轴径 Shaft D_s	型号规格 Standard No.	垫片尺寸 Washer size				安装尺寸 Assemble size		H_d+0.12
		D_i+0.25	D_o-0.25	S_T-0.05	d_p±0.125	$d_{D\ +0.1}^{+0.4}$	H_a±0.2	
8	W10	10	20	1.5	15	1.5	1	20
10	W12	12	24		18			24
12	W14	14	26		20	2		26
14	W16	16	30		23			30
16	W18	18	32		25			32
18	W20	20	36		28	3		36
20	W22	22	38		30			38
22	W24	24	42		33			42
24	W26	26	44		35			44
26	W28	28	48		38	4		48
30	W32	32	54		43			54
36	W38	38	62		50			62
40	W42	42	66		54			66
46	W48	48	74	2	61		1.5	74
50	W52	52	78		65			78
60	W62	62	90		76			90

Order 订购

Catalog No. 目录号	.	D_i	.	S_t
5210	.	008	.	001.5

6201

Strip Specification & Tolerance
板材规格及公差

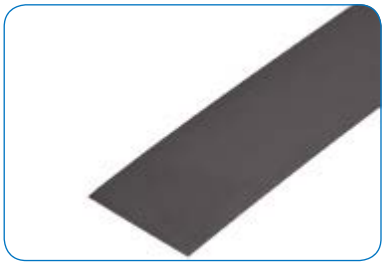

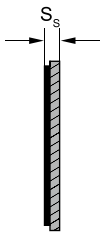

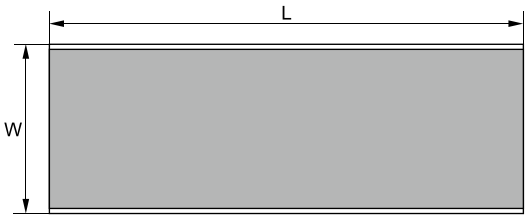

单位Unit: mm

型号规格 Standard No.	宽度 W±1	长度 L±1	厚壁 Wall thickness S_s-0.05
SP	150	500	1.0
SP	150	500	1.5
SP	150	500	2.0
SP	150	500	2.5

Order 订购

Catalog No. 目录号	.	W	.	L	.	S_s
6201	.	150	.	500	.	001

5420

Marginal Pb-free Self-lubricating Bushes
边界无铅自润滑轴套

5420 is designed for marginal lubricating bushing. It is backed with copper-plated steel with porous bronze sintered on it and polymers (POM) imbedded into the bores of the bronze. The steel back provides the products with high quality low carbon steel. Oil dents stamped on the surface of the polymer can achieve good lubrication between the bushing and its mating axis. It is of good anti-abrasion and load capalility. The plating coating on the surface is erosion protective. And it is environmental protective as no lead included in the surface polymer POM. Products of 5420 series are widely used on automotive chassis, forging machines, mine quarrying machines, metal melting and casting machines and in water irrigating and steel rolling industries.

5420 边界润滑轴承以优质低碳钢为基体，中间烧结球形多孔青铜粉，与表面改性聚甲醛（POM）牢固嵌合。表面轧制储油坑，从而实现了摩擦副之间的良好润滑。它具有良好的耐磨性和承载能力，钢背表面镀层防腐蚀。由于表面改性聚POM不含铅，使轴承润滑条件更干净，符合环保要求，广泛应用于汽车底盘、锻压机床、矿山机械、冶金机械、水利和轧钢行业等。

材料组织 Material Structure

1.POM with fiber 0.3~0.5mm
2.Porous bronze 0.2~0.3mm
3.Steel backing 0.4~2.2mm
4.Plated coating: Tin plating 0.005mm or Copper plating 0.008mm
1.聚甲醛与纤维混合物0.3-0.5mm
2.球形青铜粉0.2-0.3mm
3.钢背0.4-2.2mm
4.电镀层：镀锡层厚0.005mm或镀铜层厚0.008mm

Standard Size:
Stright Bearing, Thrust washer, Strip.

Non-Standard Size:
Stright Bearing, Thrust washer, Strip, Bearing bushing, Wear strips, Steel combine units

可供标准产品：
直套，止推垫片，板材。

可供非标产品：
直套，止推垫片，板材，轴瓦，滑板，钢套组合件。

化学性能 Physical and Mechanical Performance

5420表面聚合物耐化学腐蚀，因此它的耐蚀性主要取决于钢背及外表电镀层。钢背表面镀铜或镀锡，可以有效防止大气的腐蚀；若于腐蚀介质中工作，钢背可以镀锌等。

Normally, the surface polymer of 5420 is of chemical-erosion resistant quality. So its erosion-prevention quality is primarily decided by the quality of the steel back and its plating layer. Air-erosion could be effectively prevented if the steel back is plated with bronze or tin. If the bushing is to be used in erosive environment, the steel back needs to be plated with zinc, etc.

技术参数 Technical Data

最大承载 Max.load	静载 Static Load	140N/mm^2
	动载 Dynamic Load	70N/mm^2
最大PV值 Max. PV	脂润滑 Grease Lubrication	2.8N/mm^2·m/s
使用温度 Temp. limit		-40°C~+120°C
摩擦系数 Friction coefficient	脂润滑 Grease Lubrication	0.06~0.12μ
最大线速度 Max. speed	脂润滑 Grease Lubrication	2.5m/s
导热系数 Thermal conductivity		52W(m·k)$^{-1}$
热膨胀系数 Coefficient of thermal expansion		11×10^{-6}·K^{-1}
相配轴 Mating Axis	硬度 Hardness	>270HB
	粗糙度 Roughness	Ra=0.4~1.25

5421

Marginal Pb-free Self-lubricating Bushes
边界无铅自润滑轴套

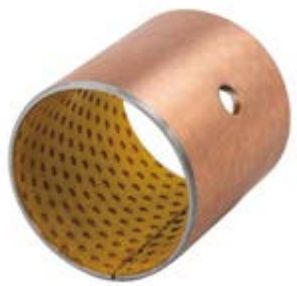

This product has the same structure and performance as the 5420. It can be used for a long time under the boundary lubrication condition without oiling. The surface of the wear layer has oil storage pits. Products are widely used in metallurgical machinery, mining machinery, hydraulic machinery, steam locomotives, construction machinery, agricultural machinery, steel rolling industry.

该产品与5420具有相同结构和使用性能，在边界润滑条件下可长期使用而不加油，耐磨层表面有储油坑。产品广泛应用于冶金机械、矿山机械、水利机械、汽机车、建筑机械、农用机械、轧钢行业等。

应用特点 Application Feature

1. Good load bearing and good wear resistance. 2. It is suitable for rotary motion, rocking motion under high load and low speed, and occasions that often open and close under load and are not easy to form hydrodynamic lubrication. 3. Under the condition of boundary lubrication, it can be maintained for a long time without oiling, and the oil is added in the overlayer to make the bearing last longer. 4. The surface plastic layer can leave a certain margin during processing and molding. After the assembly is pressed into the seat hole, it can be processed by itself to achieve a better assembly size. 5. The products are mainly used in automobile chassis, metallurgical machinery, mining machinery, water conservancy machinery, construction machinery, agricultural machinery, steel rolling equipment, etc. 6. Because it does not contain lead, it can be widely used in lead-free fields.

1.承载好，耐磨性能良好。 2.适用于高载低速下的旋转运动、摇摆运动及经常在载荷下启闭频繁而不易形成流体动力润滑的场合。 3.在边界润滑条件下可长期不加油保养，而在过层中加油使轴承使用寿命更长。 4.表面塑料层在加工成型时可留一定的余量，装配压入座孔后可自行加工，以达到更好的装配尺寸。 5.产品主要应用于汽车底盘、冶金机械、矿山机械、水利机械、建筑机械、农用机械、轧钢设备等。 6.因其不含铅，故可广泛应用于无铅领域。

材料组织 Material Structure

1.POM with fiber 0.3~0.5mm
2.Porous bronze 0.2~0.3mm
3.Steel backing 0.4~2.2mm
4.Plated coating: Tin plating 0.005mm or Copper plating 0.008mm
1.聚甲醛与纤维混合物0.3-0.5mm
2.球形青铜粉0.2-0.3mm
3.钢背0.4-2.2mm
4.电镀层：镀锡层厚0.005mm
或镀铜层厚0.008mm

Standard Size:
Stright Bearing, Thrust washer, Strip.

Non-Standard Size:
Stright Bearing, Thrust washer, Strip, Bearing bushing, Wear strips, Steel combine units

可供标准产品：
直套，止推垫片，板材。

可供非标产品：
直套，止推垫片，板材，轴瓦，滑板，钢套组合件。

技术参数 Technical Data

最大承载 Max.load	静承载 Static	250N/mm^2
	低速运转 Very low speed	140N/mm^2
	旋转、摇摆运动 Roatating oscillating	70N/mm^2
最大PV值（干摩擦）Max. PV (dry running)		3N/mm^2·m/s
使用温度 Temp. limit		-40°C~+110°C
摩擦系数 Friction coefficient		0.05~0.20μ
最大线速度 Max. speed	脂润滑 Grease Lubrication	2m/s
	持续给油 Oil continued to	>2m/s
导热系数 Thermal conductivity		50W(m·k)$^{-1}$
热膨胀系数 Coefficient of thermal expansion		11×10^{-6}·K^{-1}
最初装配时必须在油穴中涂满润滑油脂 Initial pre-lubrication at assembly is strongly recommended		

5422

Marginal Pb-free Self-lubricating Bushes
边界无铅自润滑轴套

The product is made of high-quality low-carbon steel with a spherical bronze layer in the middle and a special resin with acetal resin/lipophilic fiber on the surface. It has the characteristics of low friction coefficient, good wear resistance and lubrication under oil-free conditions. Products are widely used in yards, bulldozers, printing and dyeing machines, shearers, punching machines, cranes / driving aerial work and other fields.

该产品以优质低碳钢为基体，中间烧结球形青铜层，表面轧制以缩醛树脂/亲油性纤维的特殊树脂。具有摩擦系数低、耐磨性能好、无油条件下润滑的特点。产品广泛应用于卷场机、推土机、印染机、采煤机、冲床、吊车/行车高空作业等领域。

应用特点 Application Feature

1. Good load bearing and good wear resistance. 2. It is suitable for rotary motion, rocking motion under high load and low speed, and occasions that often open and close under load and are not easy to form hydrodynamic lubrication. 3. Under the condition of boundary lubrication, it can be maintained for a long time without oiling, and the oil is added in the overlayer to make the bearing last longer. 4. The surface plastic layer can leave a certain margin during processing and molding. After the assembly is pressed into the seat hole, it can be processed by itself to achieve a better assembly size. 5. The products are mainly used in automobile chassis, metallurgical machinery, mining machinery, water conservancy machinery, construction machinery, agricultural machinery, steel rolling equipment, etc. 6. Because it does not contain lead, it can be widely used in lead-free fields.

1.承载好，耐磨性能良好。 2.适用于高载低速下的旋转运动、摇摆运动及经常在载荷下启闭频繁而不易形成流体动力润滑的场合。 3.在边界润滑条件下可长期不加油保养，而在过层中加油使轴承使用寿命更长。 4.表面塑料层在加工成型时可留一定的余量，装配压入座孔后可自行加工，以达到更好的装配尺寸。 5.产品主要应用于汽车底盘、冶金机械、矿山机械、水利机械、建筑机械、农用机械、轧钢设备等。 6.因其不含铅，故可广泛应用于无铅领域。

材料组织 Material Structure

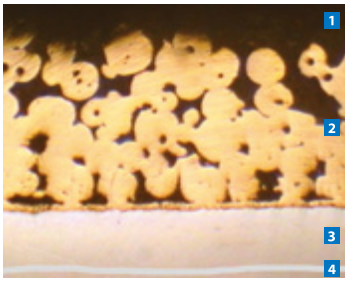

1.POM with fiber 0.3~0.5mm
2.Porous bronze 0.2~0.3mm
3.Steel backing 0.4~2.2mm
4.Plated coating: Tin plating 0.005mm or Copper plating 0.008mm
1.聚甲醛与纤维混合物0.3-0.5mm
2.球形青铜粉0.2-0.3mm
3.钢背0.4-2.2mm
4.电镀层：镀锡层厚0.005mm 或镀铜层厚0.008mm

Standard Size:
Stright Bearing, Thrust washer, Strip.

Non-Standard Size:
Stright Bearing, Thrust washer, Strip, Bearing bushing, Wear strips, Steel combine units.

可供标准产品:
直套P11，止推垫片P13，板材P13。

可供非标产品:
直套，止推垫片，板材，轴瓦，滑板，钢套组合件。

技术参数 Technical Data

最大承载 Max.load	静承载 Static	140N/mm^2
	低速运转 Very low speed	140N/mm^2
最大PV值（干摩擦）Max. PV (dry running)	连续 Continuous	2.8N/mm^2·m/s
使用温度 Temp. limit		-150°C ~ 250°C
摩擦系数 Friction coefficient		0.08 ~ 0.12μ
最大线速度 Max. speed	干 Dry	2m/s
	流体 Lubrication	10m/s
导热系数 Thermal conductivity		52W(m·k)$^{-1}$
热膨胀系数 Coefficient of thermal expansion		11×10^{-6}·K^{-1}
最初装配时必须在油穴中涂满润滑油脂 Initial pre-lubrication at assembly is strongly recommended		

5420
5421
5422

Sleeve Bushing Specification & Tolerance
轴承规格及公差

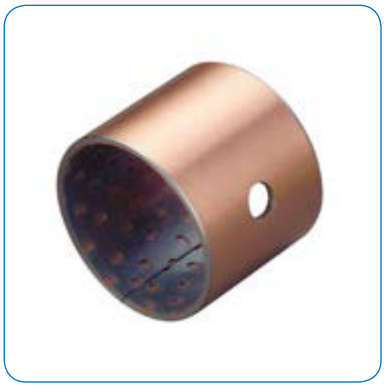

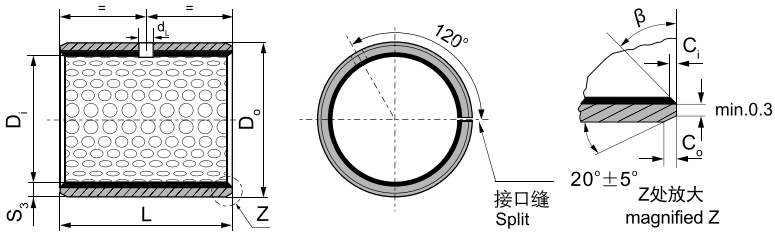

内外倒角 ID and OD chamfers

S_3	C_o	C_i	β
1.0	0.6±0.3	0.30±0.2	30°±5°
1.5	0.7±0.3	0.50±0.2	30°±5°

S_3	C_o	C_i	β
2.00	1.2±0.4	0.50±0.3	30°±5°
2.50	1.8±0.6	0.80±0.3	45°±5°

单位Unit: mm

5420/5421/5422 Sleeve Bushing Specification & Tolerance
5420/5421/5422 轴承规格及公差

轴径 Shaft	10	12	14	15	16	18	20	22	25	28	30	35	40	45	50	55	60
D_S h8	-0.000 -0.022			-0.000 -0.027					0.000 -0.033				0.000 -0.039			0.000 -0.046	
座孔 Housing H7 D_H	12	14	16	17	18	20	23	25	28	32	34	39	44	50	55	60	65
			+0.018 +0.000				+0.021 +0.000					+0.025 +0.000				+0.030 +0.000	
(OD) 外径公差 Tolerance D_O	12	14	16	17	18	20	23	25	28	32	34	39	44	50	55	60	65
			+0.065 +0.030				+0.075 +0.035					+0.085 +0.045				+0.100 +0.055	
(ID)压装后 内孔公差 After fixed $D_{i,a}$	10	12	14	15	16	18	20	22	25	28	30	35	40	45	50	55	60
			+0.108 +0.040			+0.111 +0.040		+0.131 +0.050			+0.155 +0.060				+0.195 +0.080		
壁厚 Wall thick-ness S_3			1.0 -0.020 -0.045				1.5 -0.025 -0.055				2.0 -0.030 -0.065			2.5 -0.040 -0.085			
配合间隙 Clearance D_D	0.130 0.040		0.135 0.040			0.138 0.040		0.164 0.050		0.188 0.060		0.194 0.060		0.234 0.080	0.239 0.080	0.246 0.080	
油孔 Oil hole d_L	4								6				8				
10	●	●															
15	●	●	●	●	●	●	●	●	●								
20	●	●	●	●	●	●	●	●	●	●	●	●	●	●			
25				●	●	●	●	●	●	●	●	●	●	●			
30							●	●	●	●	●	●	●	●	●	●	●
35											●	●	●	●	●	●	●
40											●	●	●	●	●	●	●
45													●	●	●	●	●
50													●	●	●	●	●
55															●	●	●
60																	

5420
5421
5422

Sleeve Bushing Specification & Tolerance
轴承规格及公差

HDB®

5420/5421/5422 Sleeve Bushing Specification & Tolerance
5420/5421/5422 轴承规格及公差

轴径 Shaft D_s h8	65	70	75	80	85	90	100	105	110	120	125	130	140	150	160	170	180	190	200	220	240	250	260	280	300
	-0.000 -0.046				-0.000 -0.054						-0.000 -0.063							-0.000 -0.072					-0.000 -0.081		
座孔 Housing H7 D_H	70	75	80	90	95	105	110	115	125	130	135	145	145	155	165	175	185	195	205	225	245	255	265	285	305
	+0.030 -0.000			+0.035 +0.000					+0.040 +0.000								+0.046 +0.000					+0.052 +0.000			
(OD) 外径公差 Tolerance D_O	70	75	80	85	90	95	105	110	115	125	130	135	145	155	165	175	185	195	205	225	245	255	265	285	305
	+0.100 +0.055			+0.120 +0.070						+0.170 +0.100							+0.210 +0.130					+0.260 +0.170			
(ID)压装后 内孔公差 After fixed $D_{i,a}$	65	70	75	80	85	90	100	105	110	120	125	130	140	150	160	170	180	190	200	220	240	150	160	180	300
	+0.200 +0.080			+0.265 +0.100					+0.265 +0.110	+0.270 +0.110							+0.276 +0.110					+0.282 +0.110			
壁厚 Wall thick- ness S_3	2.5 -0.040 -0.085																								
	2.5 -0.050 -0.150																								
配合间隙 Clearance D_D	0.246 0.080			0.313 0.100	0.321 0.100					0.321 0.100							0.339 0.110					0.354 0.110			
油孔 Oil hole d_L	8			9.5											9.5					9.5					
40	●	●	●	●	●	●																			
50	●	●	●	●	●	●	●	●	●	●	●	●	●	●	●	●	●	●	●	●	●	●	●	●	●
60	●	●	●	●	●	●	●	●	●	●	●	●	●	●	●	●	●	●	●	●	●	●	●	●	●
80		●	●	●	●	●	●	●	●	●	●	●	●	●	●	●	●	●	●	●	●	●	●	●	●
90						●	●	●	●	●	●	●	●	●	●	●	●	●	●	●	●	●	●	●	●
95							●	●	●	●	●	●	●	●	●	●	●	●	●	●	●	●	●	●	●
100								●	●	●	●	●	●	●	●	●	●	●	●	●	●	●	●	●	●
110								●	●	●	●	●	●	●	●	●	●	●	●	●	●	●	●	●	●
120																		●	●	●	●	●	●	●	●

Order 订购

Catalog No. 目录号	.	D_i	.	D_O	.	L
5420	.	020	.	023	.	020
5421	.	020	.	023	.	020
5422	.	020	.	023	.	020

5410

Thrust Washer Specification & Tolerance
垫片规格及公差

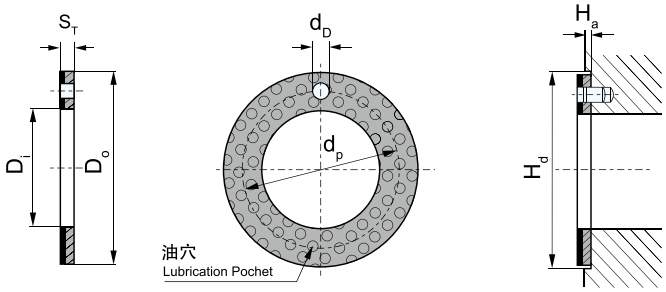

单位Unit: mm

轴径 Shaft D_S	型号规格 Standard No.	垫片尺寸 Washer size				安装尺寸 Assemble size		
		D_i+0.25	D_o-0.25	S_T-0.05	d_p±0.125	d_D +0.4 +0.1	H_a±0.2	H_d+0.12
8	W10	10	20	1.5	15	1.5	1	20
10	W12	12	24		18			24
12	W14	14	26		20	2		26
14	W16	16	30		23			30
16	W18	18	32		25			32
18	W20	20	36		28	3		36
20	W22	22	38		30			38
22	W24	24	42		33			42
24	W26	26	44		35			44
26	W28	28	48		38	4		48
30	W32	32	54		43			54
36	W38	38	62		50			62
40	W42	42	66		54			66
46	W48	48	74	2	61		1.5	74
50	W52	52	78		65			78
60	W62	62	90		76			90

Order 订购 Catalog No. 目录号 . D_i . S_T
5410 . 012 . 001.5

6401

Strip Standard Metric Size
板材标准公制尺寸

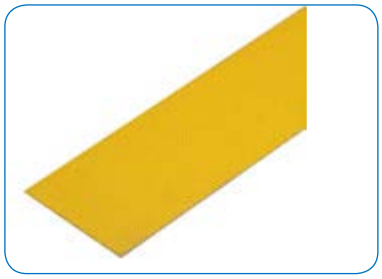

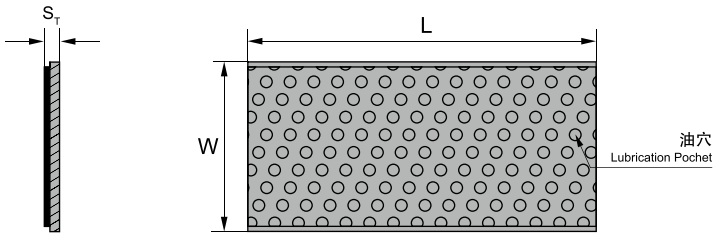

单位Unit: mm

型号规格 Standard No.	宽度 W ±1	长度 L ±1	厚壁 Wall thickness S_s -0.05
P	150	500	1.0
P	150	500	1.5
P	150	500	2.0
P	150	500	2.5

Order 订购 Catalog No. 目录号 . W . L . S_s
6401 . 150 . 500 . 001

7021

Universal Bearings
通用型轴承

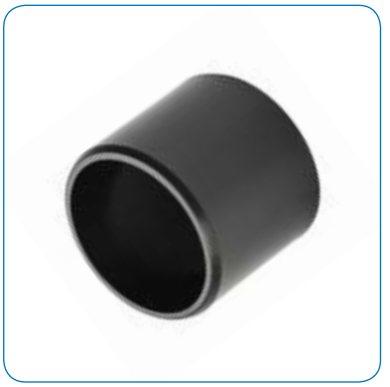

产品特性 Product Features

■ The most common plastic bearing material.It is suitbale for the application with working temperature not higher than 80℃. It is the prefereable material with good wear resistance and economic efficient for a new designation
■ Continuous working temperature: -40℃~ 80℃
■ Very common; suitable for most of average and low load
■ Maintenance-free dry operation
■ Light wear against different shaft materials
■ Low friction

■ 通用性最强的塑料轴承。可满足工作温度80度以下的大部分应用场合，出色的耐磨性能和合理的价格往往是设计工程师的首选材料
■ 连续使用温度：-40℃~ 80℃
■ 通用性强适合多数中低载荷场合
■ 适合干运行、免维护
■ 不同轴材料磨损很小
■ 较低的摩擦系数

材料性能 Material Properties	试验方法 Testing Method	单位 Uint	7021
密度Density	ISO1183	g/cm3	1.46
颜色Color			深灰Dark Grey
对钢的动摩擦系数Dynamic friction/steel(dry)			0.05-0.15
最大P.V值 Max.PV（dry）		n/mm2×m/s	0.4
最大旋转速度值Max.roatating velocity		m/s	1.0
最大摇摆速度值Max.oscillating velocity		m/s	0.7
最大直线速度值Max.linear velocity		m/s	3.0
抗拉强度 Tensile strength	ISO527	MPa	80
抗压强度（轴向）Coppressive strength(Axial)		MPa	65
弹性模量E-module	ISO527	MPa	2300
允许最大表面静压力（20℃）Max.static pressure of the surface，20℃		MPa	35
邵氏硬度 Rockwell hardness	ISO2039-2	HRR	108
连续工作温度 continuous work temperature		℃	-40/80
短时运行温度 Short-time		℃	-40/120
导热性 Thermal conductivity	ASTME1461	W/m k	0.2
线性热膨胀系数 Linear coef.of thermal eapansion	ASTMD696	K-1×10-5	10
RH50/23℃时的吸湿性 Moisture absorption RH50/23℃	ASTMD570	%	0.2
最大吸水率23℃ Max. water absorption,23℃		%	1.2
体电阻率Volume resistivity	IEC60093	Ωcm	> 1012
面电阻率Surface resistivity	IEC60093	Ω	> 1015

7022

Food Grade Drug Bearing
食品药品级轴承

产品特性 Product Features

- it is a PTFE and Sillcon free material widely used in the food and packing macnineries.
- Continuous working temperature: -40°C/+80°C
- No special requirement on the surface roughness
- Low friction coefficient
- Applicable for flexible shaft
- FDA grade

- 不含PTFE和Sillcon材料。应用于食品加工和包装工业
- 连续使用温度：-40°C/+80°C
- 对轴表面祖糙度要求低
- 较低的摩擦系数
- 适用于软轴
- FDA等级食品安全认证

材料性能 Material Properties	试验方法 Testing Method	单位 Uint	7024
密度Density	ISO1183	g/cm3	1.14
颜色Color			白色While
对钢的动摩擦系数Dynamic friction/steel(dry)			0.01-0.40
最大P.V值 Max.PV（dry）		n/mm2×m/s	0.1
最大旋转速度值Max.roatating velocity		m/s	0.6
最大摇摆速度值Max.oscillating velocity		m/s	0.4
最大直线速度值Max.linear velocity		m/s	1.0
抗拉强度 Tensile strength	ISO527	MPa	83
抗压强度（轴向）Coppressive strength(Axial)		MPa	50
弹性模量E-module	ISO527	MPa	2800
允许最大表面静压力（20°C）Max.static pressure of the surface，20°C		MPa	20
邵氏硬度 Rockwell hardness	ISO2039-2	HRR	76
连续工作温度 continuous work temperature		°C	-40/+80
短时运行温度 Short-time		°C	-40/+170
导热性 Thermal conductivity	ASTME1461	W/m k	0.2
线性热膨胀系数 Linear coef.of thermal eapansion	ASTMD696	K-1×10-5	10
RH50/23°C时的吸湿性 Moisture absorption RH50/23°C	ASTMD570	%	1.5
最大吸水率23°C Max. water absorption,23°C		%	7.6
燃烧性能 Flammability	UL94		HB
体电阻率Volume resistivity	IEC60093	Ωcm	> 1012
面电阻率Surface resistivity	IEC60093	Ω	> 1015

7023

High Speed Bearing
低速移动轴承

产品特性 Product Features

■ Low friction and high wear resistance. It could maintain a good stable wear resistance and friction factor for the rotation, linear and oscilation movement. It has no critical hardness requirement to the shaft
■ Continuous working temperature: -50°C /+ 90°C
■ Maintenance-free dry operation
■ Small wear off amount against various shaft materials
■ Lower friction
■ Suitable for soft shaft
■ Low water absorption

■ 低摩擦系数和高耐磨性完美结合。旋转、直线和摆动应用中耐磨性和摩擦系数几乎保持一致。对轴材料硬度要求较低。不适合极高载荷
■ 连续使用温度：-50°C/+90°C
■ 适合干运行、免维护
■ 不同轴材料磨损很小
■ 较低的摩擦系数
■ 适用于软轴
■ 吸水性较低

材料性能 Material Properties	试验方法 Testing Method	单位 Uint	7022
密度Density	ISO1183	g/cm3	1.48
颜色Color			黄色 Yellow
对钢的动摩擦系数Dynamic friction/steel(dry)			0.05-0.15
最大P.V值 Max.PV（dry）		n/mm2×m/s	0.4
最大旋转速度值Max.roatating velocity		m/s	1.5
最大摇摆速度值Max.oscillating velocity		m/s	1.1
最大直线速度值Max.linear velocity		m/s	8.0
抗拉强度 Tensile strength	ISO527	MPa	75
抗压强度（轴向）Coppressive strength(Axial)		MPa	60
弹性模量E-module	ISO527	MPa	2400
允许最大表面静压力（20°C）Max.static pressure of the surface，20°C		MPa	35
邵氏硬度 Rockwell hardness	ISO2039-2	HRR	74
连续工作温度 continuous work temperature		°C	-50/+90
短时运行温度 Short-time		°C	-50/+120
导热性 Thermal conductivity	ASTME1461	W/m k	0.25
线性热膨胀系数 Linear coef.of thermal eapansion	ASTMD696	K-1×10-5	9
RH50/23°C时的吸湿性 Moisture absorption RH50/23°C	ASTMD570	%	0.2
最大吸水率23°C Max. water absorption,23°C		%	1.2
燃烧性能 Flammability	UL94		HB
体电阻率Volume resistivity	IEC60093	Ωcm	> 1013
面电阻率Surface resistivity	IEC60093	Ω	> 1012

7024

High Dynamic Load Bearing
高动载荷轴承

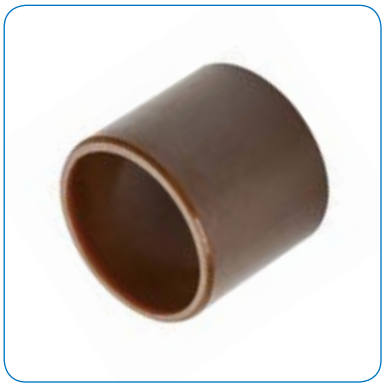

产品特性 Product Features

- It is a high load material with excellent low fridion factor. Marginal load application is acceptable and it is with good wear resistance both for hard and soft shafts
- Continuous working temperature: -100°C/+250°C
- High load capacity
- Higher speed is permissble
- Marginal pressure is permissible
- Best performance for oscillating movement

- 高载荷和低摩擦系数出色的材料。可承受边缘载荷。软轴或硬轴配和使用同样耐磨
- 连续使用温度-100°C/+250°C
- 适合高载荷运动
- 允许较高的运行速度
- 允许边界压力
- 摆动运行性能尤为出色

材料性能 Material Properties	试验方法 Testing Method	单位 Uint	7023
密度Density	ISO1183	g/cm3	1.40
颜色Color			棕色Brown
对钢的动摩擦系数Dynamic friction/steel(dry)			0.05-0.15
最大P.V值 Max.PV（dry）		n/mm2×m/s	1.0
最大旋转速度值Max.roatating velocity		m/s	1.5
最大摇摆速度值Max.oscillating velocity		m/s	1.1
最大直线速度值Max.linear velocity		m/s	5.0
抗拉强度 Tensile strength	ISO527	MPa	90
抗压强度（轴向）Coppressive strength(Axial)		MPa	65
弹性模量E-module	ISO527	MPa	2500
允许最大表面静压力（20°C）Max.static pressure of the surface，20°C		MPa	150
邵氏硬度 Rockwell hardness	ISO2039-2	HRR	81
连续工作温度 continuous work temperature		°C	-100/+250
短时运行温度 Short-time		°C	-100/+310
导热性 Thermal conductivity	ASTME1461	W/m k	0.6
线性热膨胀系数 Linear coef.of thermal eapansion	ASTMD696	K-1×10-5	4
RH50/23°C时的吸湿性 Moisture absorption RH50/23°C	ASTMD570	%	0.3
最大吸水率23°C Max. water absorption,23°C		%	1.1
燃烧性能 Flammability	UL94		V0
体电阻率Volume resistivity	IEC60093	Ωcm	> 1011
面电阻率Surface resistivity	IEC60093	Ω	> 1011

7021~7024

Standard Specifications
标准规格

直套

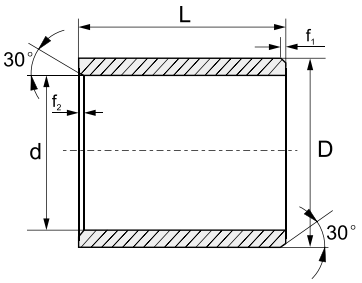

推荐安装公差座孔 : H7
轴 : h9

d	f_1	f_2
1-6	0.3	0.5
6-12	0.5	
12-30	0.8	
>30	1.2	

d [mm]	d- 公差 [mm]	D [mm]	L(h13) [mm]
3	+0.054 +0.014	4.5	3
		4.5	5
		4.5	6
		5	5
4	+0.068 +0.020	5.5	4
		5.5	6
		5.5	8
		6	6
5		7	5
		7	8
		7	10
		7	12
		7	18
6		8	4
		8	5
		8	6
		8	8
		8	10
		8	11
8	+0.083 +0.025	10	5
		10	6
		10	8
		10	10
		10	11
		10	12
		10	15
		11	10
		12	10
9		11	6
10		12	4
		12	5
		12	6
		12	8
		12	10
		12	12

d [mm]	d- 公差 [mm]	D [mm]	L(h13) [mm]
10	+0.083 +0.025	12	15
		14	10
		14	16
		12	18
		12	20
12	+0.102 +0.032	14	6
		14	8
		14	10
		14	12
		14	15
		14	20
		14	25
		14	30
		15	20
		16	12
13		15	7
		15	10
14		16	8
		16	10
		16	12
		16	15
		16	20
		16	25
15		17	10
		17	12
		17	15
		17	17
		17	20
		17	25
16		18	10
		18	12
		18	15
		18	20
		18	25
	+0.015/+0.055	19	5.5

7021~7024

Standard Specifications
标准规格

d [mm]	d- 公差 [mm]	D [mm]	L(h13) [mm]
16	+0.102 +0.032	20	16
18		20	15
		20	20
		20	25
20	+0.124 +0.040	22	12
		22	15
		22	28
		23	10
		23	15
		23	20
		23	23
		23	25
		23	30
		25	15
22		25	15
		25	20
		25	25
		25	30
25		28	10
		28	12
		28	15
		28	20
		28	25
		28	30
		29	25
		30	25
28		32	20
		32	25
		32	30
30		34	20
		34	25
		34	30
		34	40

d [mm]	d- 公差 [mm]	D [mm]	L(h13) [mm]
32	+0.150 +0.050	36	20
		36	23
		36	25
		36	30
		36	40
35		39	15
		39	20
		39	25
		39	30
		39	40
		39	50
40		44	20
		44	30
		44	40
		44	50
45		50	30
		50	40
		50	50
50		55	10
		55	20
		55	30
		55	40
		55	50
54	+0.180 +0.060	56	30
60		65	50
70		75	50
80		85	40
85	+0.072/+0.212	90	40
125	+0.143 +0.043	130	60
150		155	60

*d 公差为压入标准 H7 座孔 (ISO3547-1) 后公差

Order 订购

Catalog No. 目录号	. d	. D	. L
7021	. 008	. 010	. 010
7022	. 008	. 010	. 010
7023	. 008	. 010	. 010
7024	. 008	. 010	. 010

翻边轴套

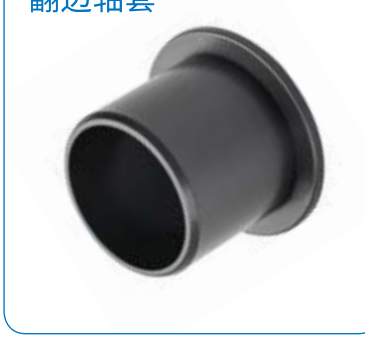

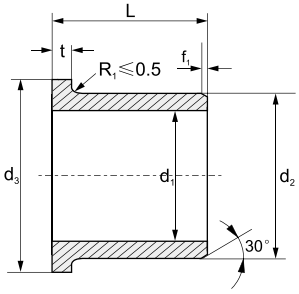

推荐安装公差座孔 : H7
轴 : h9

d	f
1-6	0.3
6-12	0.5
12-30	0.8
>30	1.2

7021~7024-F

Standard Specifications
标准规格

d_1 [mm]	d_1- 公差 [mm]	d_2 [mm]	d_3[d13] [mm]	L[h13] [mm]	$t_{0.14}$ [mm]
3	+0.054 +0.014	4.5	7.5	3	0.75
				5	0.75
4	+0.068 +0.020	5.5	9.5	3	0.75
				6	0.75
5		7	11	3	1
				4	1
				5	1
6		8	12	4	1
				5	1
				6	1
				8	1
				10	1
8	+0.083 +0.025	10	15	5	1
				6	1
				7	1
				9	1
				10	1
			14	12	1
			15	12	1
			18	13	1
			17	15	1
		12	16	10	2
9			18	10	2
10				5	1
				6	1
				7	1
				8	1
				9	1
				10	1
				12	1
				15	1
				17	1
	+0.071 +0.013		16	12	2
		14	18	10	2
12	+0.102 +0.032		20	4	1
				5	1
				6	1
				7	1
				9	1
				10	1
				12	1
				13	1
				15	1
				17	1
				18	1
				20	1
			17	4	1
				5	1
	+0.016/+0.086		18	12	2
	+0.032/+0.102			25	1
	+0.086 +0.016			40	2
		16	20	10	2
				12	2
13	+0.032/+0.102	15	19	12	1

d_1 [mm]	d_1- 公差 [mm]	d_2 [mm]	d_3[d13] [mm]	L[h13] [mm]	$t_{0.14}$ [mm]
14	+0.102 +0.032	16	22	5.2	1
				8	1
				10	1
				12	1
				17	1
	+0.086 +0.016		20	6	2
				15	2
	+0.102 +0.032	18	22	20	2
15		17	20	5	1
			23	9	1
				12	1
			20	12	1
			23	15	1
				17	1
				20	1
		18		12	1
		17		25	1
16		18	24	12	1
				17	1
			22	22	2
	+0.086 +0.016	20	24	16	2
				22	2
18	+0.102 +0.032		26	12	1
				17	1
				20	1
	+0.016/+0.086		24	22	2
20	+0.124 +0.040	22	25	15	1.5
		23	30	11.5	1.5
				16.5	1.5
				21.5	1.5
				25	1.5
	+0.104 +0.020			15	2
				22	2
		24		20	2
		25		15	2
		27	32	20	2
22	+0.124 +0.040	25	33	11.5	1.5
25		28	35	11.5	1.5
				16.5	1.5
				21.5	1.5
	+0.104 +0.02			22	2
				32	2
		30		20	2.5
				25	2.5
30		33		4	1
	+0.124 +0,040	34	42	9	2
				16	2
				26	2
				32	2
				37	2
	+0.104 +0.020		45	18	2
				22	2
	+0.04/+0.124			32	2
32	+0.05/+0.15	36	40	16	2

7021~7024

Standard Specifications
标准规格

d_1 [mm]	d_1- 公差 [mm]	d_2 [mm]	d_3[d13] [mm]	L[h13] [mm]	$t_{-0.14}$ [mm]
32	+0.150 +0.050	36	40	26	2
35		39	47	16	2
				26	2
	+0.025/+0.125		50	22	2
40	+0.150 +0.050	44	52	30	2
				40	2
	+0.025/+0.125		55	17	2
45	+0.150 +0.050	50	58	25	2
				45	2
				50	2
	+0.025/+0.125		60	45	2.5
50	+0.150 +0.050	55	63	20	2
				30	2

d_1 [mm]	d_1- 公差 [mm]	d_2 [mm]	d_3[d13] [mm]	L[h13] [mm]	$t_{-0.14}$ [mm]
50	+0.150 +0.050	55	63	40	2
				50	2
	+0.125 +0.025			50	2
			65	20.5	2.5
60	+0.06/+0.18	65	73	60	2
65	+0.03/+0.15	70	80	60	2.5
70	+0.060/+0.180	75	83	50	2
75	+0.150 +0.030	80	90	25	2.5
				40	2.5
90	+0.036/+0.176	95	110	50	2.5
120	+0.072/+0.212	125	140	50	2.5

*d_1 公差为压入标准 H7 座孔 (ISO3547-1) 后公差

Order 订购

Catalog No. 目录号	. d	. L
7021	. 008	. 010 -F
7022	. 008	. 010 -F
7023	. 008	. 010 -F
7024	. 008	. 010 -F

垫片

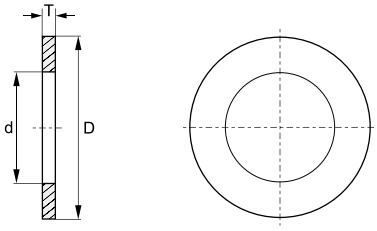

$d^{+0.25}$ [mm]	$D_{-0.25}$ [mm]	$T_{-0.05}$ [mm]
5	9	0.6
6	15	1.5
6	20	1.5
8	15	0.5
8	15	1.5
8	18	1.0
8	18	1.5
10	18	1.0
10	18	1.5
10	18	2.0
10	24	1.5
12	24	1.5
12	26	1.5
14	26	1.5
14	30	1.5
15	24	1.5
16	30	1.5
16	32	1.5
18	32	1.5
18	36	1.5

$d^{+0.25}$ [mm]	$D_{-0.25}$ [mm]	$T_{-0.05}$ [mm]
20	30	1.5
20	36	1.5
20	38	1.5
22	38	1.5
22	42	1.5
24	42	1.5
24	44	1.5
25	48	1.5
26	44	1.5
28	48	1.5
30	54	1.5
32	54	1.5
36	62	1.5
38	62	1.5
42	66	1.5
46	74	2.0
48	74	2.0
51	78	2,0
52	78	2.0
62	90	2.0

Order 订购

Catalog No. 目录号	. d	. D	. T
7021	. 010	. 018	. 001.0 -W
7024	. 010	. 018	. 001.0 -W

Wrapped Bushing Dimensional Inspection
卷制类轴承尺寸公差检测方法

Test A of ISO 检验方法 A

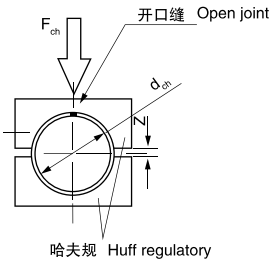

Test D (ISO 3547-2)

The test is carried out by means of a precision measuring tape.

检验方法 D (ISO3547-2: Test D)

采用精确的测量尺来测量外径， 一般针对大规格的轴套外径检测。

Test B of ISO 检验方法 B

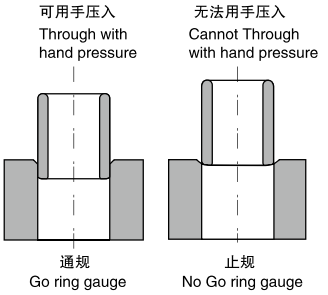

哈夫规和芯棒 d_{ch}=_____mm
Checking block and setting mandrel

检验压力 F_{ch}=_____N
Torce test

极限值 $\triangle_{Z}$=___and___mm
Limiting value

外径公差 D_o=___to___mm
OD tolerance

Rolled products in the manufacturing process determine the existence of open joints, making products in the free state not habe a good whole circle shape, while sleeve diameter and the seat for the interference fit between the holes, sleeve adapted to maximize Block hole shape can not be directly measured in the free state the inner/outside diameter of the product only can be by a special measuring instrument; In ISO3547 standards measured Part 2 of the rolled products made clear tolerance test requirements, including :

Test Method A: Huff regulatory test outside diameter;

Test method B: use stop-pass gauge to test the outside diameter;

Test method C: use stop-pass gauge to test the inside diameter;

Test method D: Measure the outer diameter of large scale product and use wall-thickness test to replace test method C. (Wall-thickness test and test method C can not be used at the same time.)

卷制类产品的制造工艺决定了开口缝的存在，使得产品在自由状态下没有很好的圈整度，同时轴套外径和座孔之间为过盈配合，轴套要最大限度地适应座孔的形状，因此不能在自由状态下直接测量产品的内外经而必须使用特殊的测量仪和设备才能检测； ISO3547 标准第 2 部分中对卷制类产品的公差检验作了明确的规定， 包括：

检验方法 A： 哈夫规检验外径；

检验方法 B： 止通规检验外径；

检验方法 C： 止通规检验内径；

检验方法 D： 测量尺检验大规格产品外径

以及替代检验方法 C 的壁厚检验方法， 壁厚检验方法和检验方法 C 不能同时使用。

External diameter test methods 外径检验方法

Test A of ISO 3547 Part 2

Check the outside diameter of a wrapped bush using measuring equipment as shown to the right, with a checking block consisting of upper and lower halves and setting plugs, at a determined checking load of Fch, during the test the outside diameter of the bush is made smaller by the elastic reduction, however it is not a permanent deformation. The bushes outside diameter can be calculated from the difference in the value of z (Z)

检验方法 A (ISO3547-2: Test A)

采用如右视图的上下两哈夫规对外径进行检验，检验时产品的开口缝朝上哈夫规相向施加检验载荷 Fch， 该载荷使卷制轴套能够按符合要求的方式就位于检验模。 检验中， 由于弹性变形卷制轴套外径会变小但不会产生永久变形。 产品的外径可以通过检验模之间的距离 Z 的变化量△ Z 来计算。

Test B of ISO 3547 Part 2

The test is carried out with two ring gauggs, a Go gauge and a No Go gauge whose diameter Shall be chosen empirically from with Table 6 of ISO3547-1:1999 and agreed upon. It shall be possible to press the bushes into the GO gauge and then push them through with hand pressure (maximum force 250N). On the other hand with the same force, it shall not be possible for them to go into and through the NO GO gauge (See ISO 12307-1)

检验方法 B (ISO3547-2: Test B)

检验采用两个环规即通规和止规，用手以最大力 250N 可将轴套推入并通过通规；在相同情况下无法进入和通过止规。在某些情况下检验精度可能受到影响，比如轴套不圆或闭合开口缝的力本身已超过 250N，此时建议采用检验方法 A 或测压入力或壁厚相结合的检验方法。

Wrapped Bushing Dimensional Inspection
卷制类轴承尺寸公差检测方法

Test C of ISO 检验方法 C

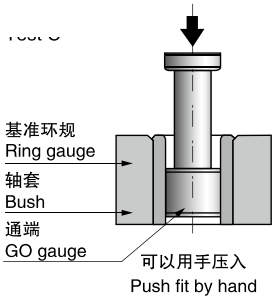

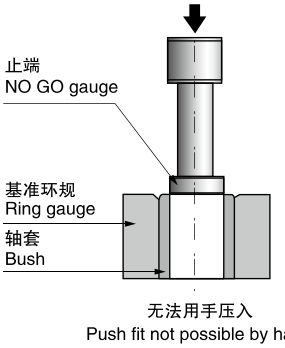

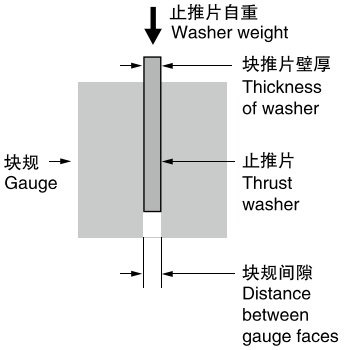

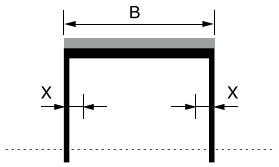

测量点
Measurement position

Internal diameter test methods 内径检验方法

Test C (ISO3547-2: Test C)

To check the inside diameter, the bush is to be pressed into a ring gauge, whose nominal diameter corresponds to the dimension specified in ISO3547-1:1999.The inside diameter shall be measured with a 3-point measuring instrument or checked with a GO and NO GO plug gauge. The GO plug gauge shall be inserted by a minimum effort; the NO GO plug gauge shall not be inserted by manual pressure(maximum force 250N). In order to enable the manufacturer and the customer to compare results of this test it should be agreed whether results should be obtained by measuring or by gauging.

检验方法 C (ISO3547-2: Test C)

将轴套压入基准环规后检查轴套的内径， 内径的检测可以采用三点测量装置或通、 止塞规检验。 从实际使用考虑一般建议采用通、 止塞规检验， 此时在用手最大推力不超过 250N 时通端塞规可以通过轴套内孔， 在相同情况下止端塞规应当无法通过轴套内孔。 当轴套压入基准环规后， 轴套外径可能会引起永久变形而无法正常使用。

Thrust washer test method 止推片检验方法

Beside the thickness, the flatness of washer is also important for washer and grinding parts' usage age. We use very helpful test in which the washer falls through the gap between two plain parallel plates of a gauge under its dead weight. The plates must be big enough to cover the whole washer.

除了厚度公差以外， 垫片的平行度对于垫片和对磨件的使用寿命同样重要。 我们使用比较有效的检验方法来检测垫片的平行度， 让垫片依靠自重来通过两个平行块； 当然平行块必须大于垫片本身的规格。

Wall Thickness test method 壁厚检测方法

The wall thickness is measured at once,two or three positions axially according to the bearing dimensions.The wall thickness and the inside diameter shall not be specified together on the same drawing.

作为检验方法 C 的替代方案两则不能同时使用，壁厚根据轴套尺寸在轴向进行测量。

B[mm]	X[mm]	测量点 measurement position
B≤15	B/2	1
15＜B≤50	4	2
50＜B≤90	6 and B/2	3
B＞90	8 and B/2	3

Wrapped Bushing Installation
卷制类轴承的安装

Straight set of installation 直套安装

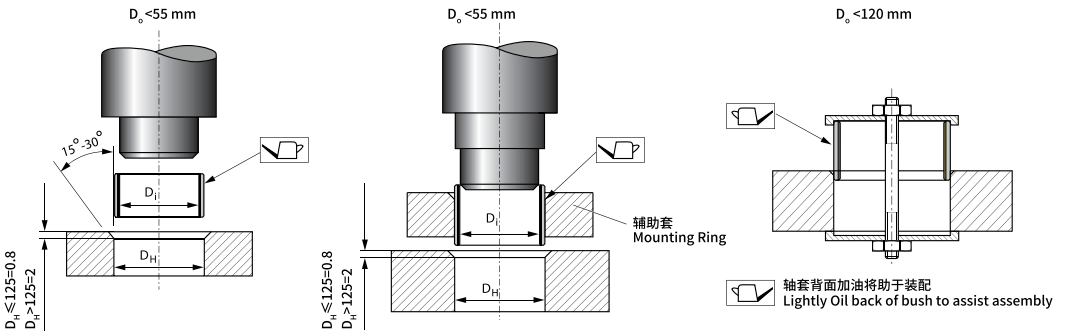

Flange set of installation 翻边套安装

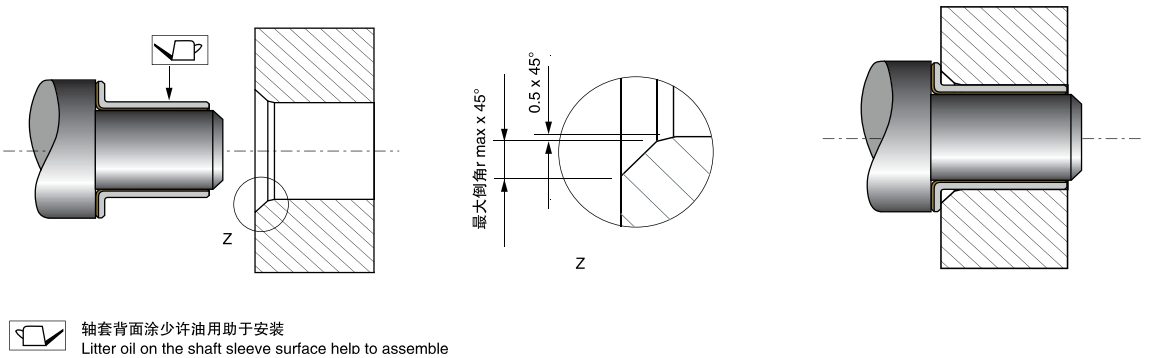

Indentation Calculation 压入力计算

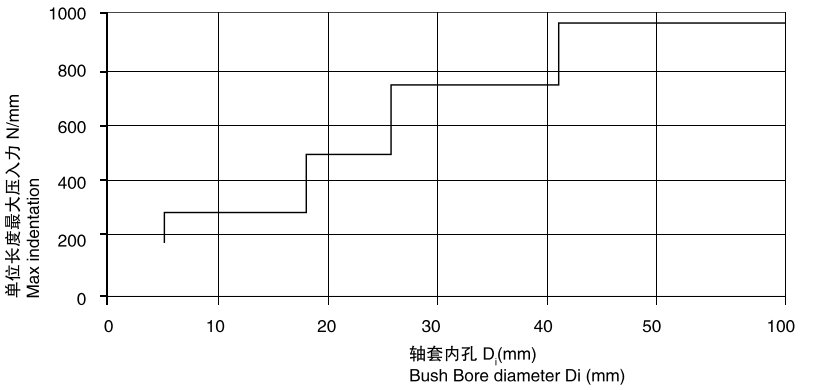

Concentricity requirements
同轴度要求

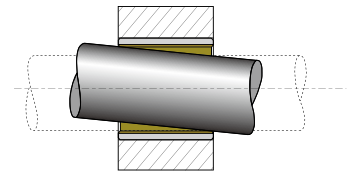

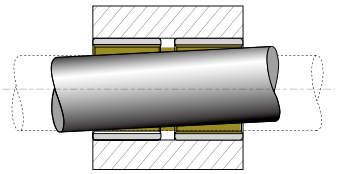

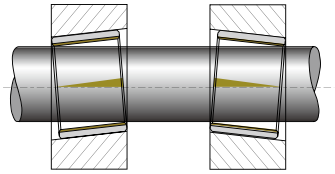

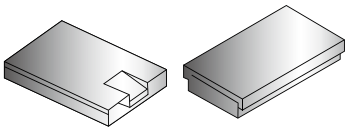

Concentricity 同轴度

Degree of precision coaxial bearing the normal use for a very important requirement sleeve length in one or two degrees of the different axes and in the flange or thrust washer diameter of the different degree of control shaft within 0.02mm.

精确的同轴度对于轴承的正常使用非常重要， 要求轴套在一个或者两个长度内的不同轴度以及在翻边或止推片直径内的不同轴度控制在 0.02mm 内。

建议垫片和滑板安装在凹陷的座孔内， 为了避免移动，同时建议采用定位销加以固定。

Thrust washers and sliding plates installation 垫片和滑板的安装

It is reconmmended to install the thrust washers and sliding plates with the hollow indented housing.To avoid the moving of such parts,a Dowel pins is recommended to be installed.

1. 定位销在垫片上的使用 Dowel pin application (thrust waher)

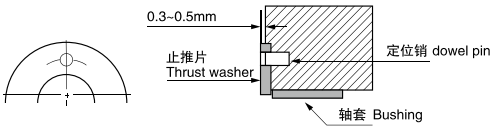

2. 定位销在滑板上的使用 Dowel pin used on slide plate

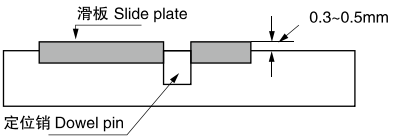

3. 平头螺丝的使用 Flat head screw application

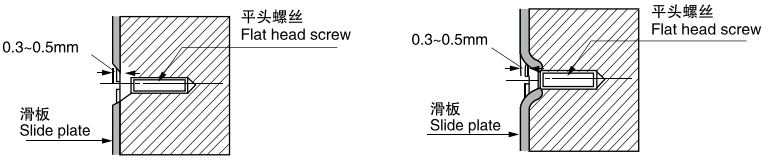

Other fixation methods 其他固定方法

When the pin is not available, you can use laser welding, adhesives and brazing (temperature < 320 ℃) method to be fixed; while do in this way, temperature used must not higher then the bearing material itself can be standed, the cleeve face should be prevent from contacting with adhesives.

当无法使用定位销时， 可以采用激光焊接， 粘结剂和钎焊 （温度 <320℃） 的方法加以固定； 此时必须主意使用的温度不能超过轴承材料本身能够承受的范围， 轴套工作面防止与粘合剂等接触。

Wrapped Bushing Installation
卷制类轴承的安装

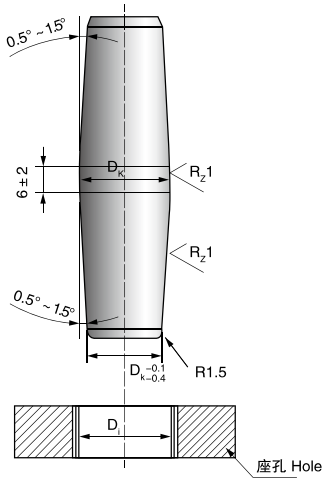

内孔 D_i Bore D_i	挤压芯棒 D_k Extrusion Mandrel D_k	使用寿命 Life
D_i	—	100%
D_i+0.02	D_i+0.06	80%
D_i+0.03	D_i+0.08	60%
D_i+0.04	D_i+0.10	30%

Processing and installation considerations of PTFE-based bearing
PTFE基轴承的加工和安装注意事项

PTFE-based bearings are generally finished parts, assembled in the hole without the hinge, and other processing, if the bore size of the recommended process, the rolling type bearings with bore roundness can meet the requirements;

If the client can accept a significant reduction of dry friction, extruding the inner holes on the PTFE-based bearing after the compression to achieve higher accuracy, we strongly recommend the extrusion mandrel surface treatment (depth of 0.6mm, HRC ＞ 55) and polished to Rz1;

When the bearing's specific pressure is small and required to run a smooth swing, you can increase the working space, when used at high temperatures, it is increased by 100 ℃ , the proposed reduction of shaft diameter 0.008mm;

If the material of bearing is bronze, aluminum or zinc alloy, it is recommended to reduce the bearing hole to increase the amount of interference bearing assembly; to ensure the bearing rigidity, The base of bearing's diameter is usually 1.5 times to the bearing's diameter, thin-walled bore with pressure to consider when installed and used in the process of the deformation;

PTFE bearings need processing, in order to avoid the generation of burrs from the PTFE side of the proposed processing or drilling in the drilling process should have sufficient support sleeve has been to ensure that no pressure leads to deformation of the borehole; processing methods strip can cut, water jet cutting, laser cutting and other methods.

PTFE 基轴承一般都是成品零件，组装后内孔不再进行铰、镗等加工，若座孔按推荐的尺寸加工时，卷制类轴承内径的真圆度完全能满足使用要求；

如果客户可以接受干摩擦性能大幅度降低，可以对 PTFE 基轴承在安装后进行内孔挤压以达到更高的精度，强烈建议对挤压芯棒表面进行热处理（深度 0.6mm，HRC ＞ 55）并抛光处理至 Rz1；

当轴承的比压力小或摆动小而要求运行平稳时，可以增大工作间隙，在高温下使用时，每升高 100°C时建议轴径减少 0.008mm；

若轴承座材质是青铜、铝或锌合金时，建议减少轴承座孔以增加轴承装配过盈量；为保证轴承座的刚性，轴承座外径通常为轴承外径的 1.5 倍，薄壁座孔使用时需要考虑压装和使用过程的产生的变形；

PTFE 轴承需要加工时，为了避免毛刺的产生建议从 PTFE 一侧进行加工或钻孔，在钻孔过程中轴套应当有足够的支撑已确保不会由于钻孔压力导致变形；带材的加工方法可以通过剪切、水切割、激光切割等方法。

Wrapped Bushing Installation
卷制类轴承的安装

The shaft 对磨轴

Grinding pieces of material, surface hardness, surface roughness and surface treatments have a great impact on the life of bearing, in general, we recommend that the hardness of the shaft HRC ＞ 50, surface roughness below Ra0.4; We suggest using stainless steel, hard chrome plating in the wet or corrosive place.

对磨件的材料、表面硬度、表面粗糙度以及表面处理方式对于轴承的使用寿命的影响很大，一般情况下我们建议轴的硬度在 HRC ＞ 50，表面粗糙度 Ra0.4 以下；在潮湿或易腐蚀的场合建议使用不锈钢、硬质铬镀层。

Incorrect design
不正确的设计

Correct design
正确的设计

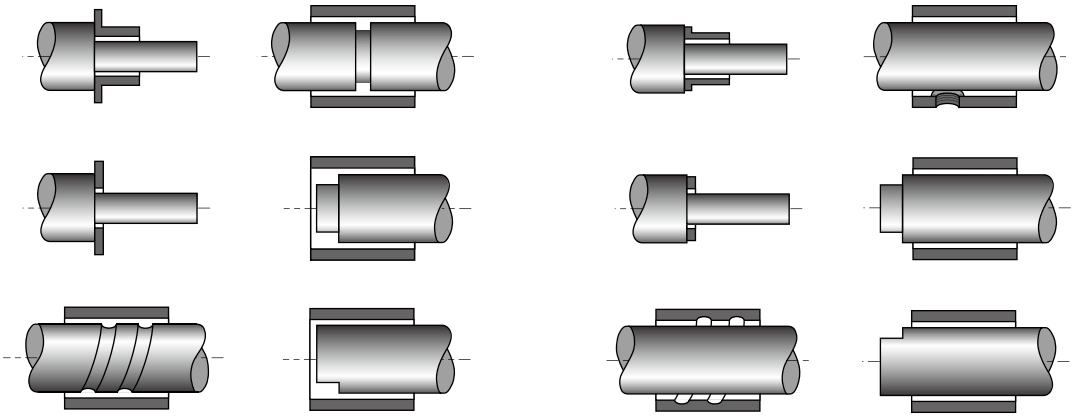

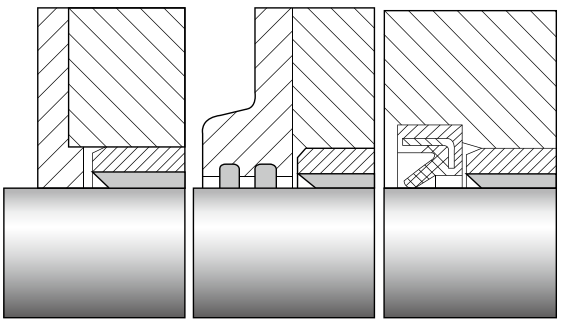

Seal 密封

If increased levels of contamination occur or the bearing is used in an aggressive environment, the bearing section should be protected from dust and containment. The normal solution is to re-design the surrounding structure so that the contamination cannot reach the bearing section. If the contamination is critical, a collar of grease or a shaft seal is recommended.

金属塑料基自润滑轴承允许一些不会损害轴承表面材料的异物进入，但当异物的侵入增加或高蹑磨型物质进入时应当安装核实的密封圈以提高轴承的使用寿命。

The Life The Bearing
轴承的寿命

The life of JDB Solid-lubricant-inlaid depends on the wear depth of the inside diameter of the bearing except such condition as acute Singe, etc. The wear depth is influenced by the load speed, foreign matter, material, surface roughness, working temperature, different operating methods and the lubricant used. So the wear depth is only a theoretical estimate value and the life of the bearing depends on all kinds of the complex conditions.

JDB 固体润滑轴承的寿命，除急剧的烧焦外，通常由轴承内径的磨损量来决定，磨损量主要受摩擦条件的影响，而摩擦又受承载、速度、杂质、材质、表面粗糙度、工作温度、不同运行方式、所使用润滑剂等条件影响，因此，磨损量只能是一个理论估计值，轴承的寿命取决于各种复杂的条件。

If the oil is not provided well, it is hard to estimat the abrasion state when the foreign matters intermingling. the following formula is the computing method.

若因供油不良，杂质渗入而使磨损急剧变化时，就很难预测磨损情形。下式为正常情况下由实验得出的磨损量计算式。

$$W=K\times P\times V\times T$$

K:摩擦系数 Coefficient of Friction [mm/(N/mm^2·m/min. hr]

W:磨损量 Wear Depth (mm)

P:承载压力 Load Pressure (N/mm^2)

V:线速度 Linear speed (m/min)

T:磨损时间 Wear Time (hr)

From the above formula you can see that if the coefficient of the friction "K" is known the real wear depth can be computed according to the pressure "P". linear speed "V" and wear time "T". But it is very difficult to calculate "K" under various actual conditions. Under ideal conditions. "K" depends on the factor "Ci" which influences it.

从上式中可以看出，若摩擦系数(K)已知，便可根据承载压力(P)、线速度(V)和磨损时间(T)计算出轴承实际磨损量。但是，在各种实际条件下准确计算出摩擦系数K是件非常困难的事情。在理想条件下，摩擦系数K由影响其值的因素因子Ci来决定。

即i. e. K=Ci×k

Ci: 影响磨损量的因素因子Ci=C1×C2×C 3×……

Ci: Ci=C1×C2×C3×……Factor genes that influence the wear depth.

K: 理想条件下的摩擦系数 And k is the coefficient of friction under ideal conditions.

K=(1-5)×10^{-8}[mm/(N/mm^2·m/min. hr)]

C_0：Coefficient of sliding conditions 滑动条件系数

C_0		线速度 Linear speed V(m/min)		
		≤1	1~10	10~30
承载压力 Loading pressure P(N/mm^2)	≤5	8~10	10~12	12~18
	5~25	12~18	18~25	25~30
	25~50	18~25	25~30	30~40

C_1：Coefficient of temperature conditions 温度条件系数

工作温度 Working temperature(°C)	≤100	100～200	200～400
C_1	1~2	3~5	5~10

C2：Coefficient of surrounding temperature 环境条件系数

环境 Surrounding	一般场所 general place	室外 outside	粉尘较多场合 Places with much powder
C_2	1~2	5~10	10~30

C3：Coefficient of places used 使用场所系数

使用场所 Places used	大气中 Atmosphere	水中 Water	海水中 Sea
C_3	1.9	0.8	1.2

1. Loading pressure 承载压力

The so-called loading pressure generally means that when the bearing is loading, the max load it bears divides the pressed area. And the loading pressed area means the projection area of the connecting parts when the bearing is cylindrical.

通常所谓承载压力是指轴承承受载荷时，轴承支持的最大载荷除以受压面积。所谓受压面积，当轴承为圆柱时，取与轴承接触部分的载荷方向的投影面积。

2. Linear speed 线速度

The heat radiated by the bearing is mainly caused by the friction of the bearing. According to the experience we know that the sliding speed "V" affects more than load pressure "P" to the surface temperature. If the bearing uses the same PV value, the higher speed the more quickly temperature ascends. So it would be better to provide lubricant to enlarge the cooling effect and liquid lubricant by using high temperature in order to reduce the coefficient of the friction and to prevent the high abrasion and burning.

轴承的发热量，主要是由轴承的摩擦作用引起的，根据经验可知，对摩擦面温度的上升，滑动速度V的影响远大于承载压力P的影响。轴承若使用同一PV值，速度V愈大，轴承面温度上升愈快，因此在高温使用时，最好能供给润滑油，增大冷却效果和流 体润滑；以求降低摩擦系数，以防高磨损和烧焦现象的发生。

3. PV value PV值

PV值是衡量轴承磨损极限和使用寿命的重要指标。以承载压力P(N/mm^2)和线速度V(m/s)的乘积PV值(N/mm^2·m/s)来表示。

PV value is an important guideline to weigh the abrasion limit and the service life of the bearing. It is shown by the load pressure P multiplying the line speed V.

轴承在单位时间，单位面积所产生的摩擦热量Q，以下式表示：

In the unit time the friction heat q caused by the unit area of the bearing can be shown by the following formula.

$$Q=\frac{\mu \cdot p \cdot v}{J}\ \text{kcal/min}$$

J: 热功当量Heat equivalent of work≈ 4270(N/mm^2·Kcal)

P: 承载压力 Load Pressure (N/mm^2)

V: 线速度 Linear speed (m/s)

μ: 摩擦系数 coefficient of the friction

If the coefficient of the friction "μ " is a little bigger, the friction heat and the PV value are in the direct ratio. Then the caused heat Q is commonly considered as the important principle in the solid lubricant bearing design.

When the bearing is running the heat and the heat radiation can be fixed at a certain temperature. If there are foreign matters in the running process, the lubricant property may be reduced and the friction shape may be changed because of the effect of the friction powder and the fatigue of the material. The enhancement of the coefficient of the friction and the ascending of the bearing temperature cause the damage of the friction surface and it will burn at last. Considering such cases, the load property of the bearing will be better and the service life will be longer if the operating temperature of the bearing is lower i.e.using lower PV value. So when designing, use lower PV value to ensure it is safe. Otherwise, it is also possible to use max PV value by carefully analyzing cooling methods, material of the shaft and the roughness of the surface,etc.

如果摩擦系数μ略大一些，轴承所产生的摩擦热量跟PV值成正比，这时所产生的热量Q，在经验上就可被认为固体润滑轴承设计时的重要依据。

当轴承运转时，轴承温度受摩擦发生的热量及热量散发情况影响，通常会在一定的温度上稳定下来。若运转持续进行中有杂质渗入，润滑油的性能就会降低，同时由于摩擦粉末的影响，材料的疲劳，此时摩擦面的形态即发生变化，摩擦系数提高，轴承的温度上升，致使摩擦面损伤，而导致烧焦，基于此种情况，轴承的运转温度越低，亦即使用低PV值时，轴承的负荷性较好，寿命延长。所以在设计时，尽可能使用较低的PV值较安全，反之，在详细分析冷却方法，轴的材质，表面粗糙度，配合间隙等因素情况下，欲超越最大PV值使用，也是可能的。

PV 值计算方法 The calculating method of the PV value:

	承载压力 Load pressure P(N/mm^2)	线速度 Linear speed
轴承 bearing	F/dl	$\pi dn/10^3$
		$\pi d\theta c/1.8\times10^3$
垫片 washer	$4F/\pi(D^2-d^2)$	$\pi n\sqrt{2(D^2+d^2)}/2\times10^3$
		$\pi\theta\sqrt{2(D^2+d^2)}/3.6\times10^3$
滑块 sliding plate	F/BL	$60S/T\times10^3$

F: 垂直承载 uprightness load (N)
d: 轴承内径 inside diameter of the bearing (mm)
D: 轴承外径 outside diameter of the bearing (mm)
B: 滑块宽度 the width of the sliding plate (mm)
L: 滑块长度 the length of the sliding plate (mm)
N: 回转数 the rotation times (rpm)
C: 往复次数 reciprocating times (cpm)
θ: 摇摆角 the rocking angle (°C)
S: 往复长度 the length of the reciprocation (mm)
T: 往复一次需要的时间 (sec)
time spenging in each reciprocation

4. Max PV value 最大PV值

The so-called max PV value means the max value of the load in the unit projection of the bearing multiplying the linear speed. Do not exceed the value when using it. When designing please be in the range of Fig 1.

所谓最大PV值是在轴承设计时，在轴承的单位投影面积内所承受的载荷及线速度乘积之最大值，使用时请勿超越此值，在设计时应在图1实线范围内。

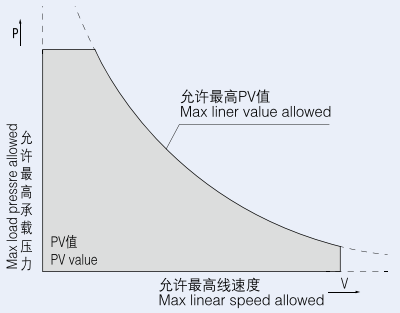

图Fig 1：轴承PV值图

HDB-JDB 固体润滑轴承 Solid Lubricating Bearing

Product Index
产品索引

HDB-850 金属复合轴承 Metal Composite Bearing

HDB-80/90 金属卷制轴承 Metal Rolled Bearing

HDB-10/20/30 无油复合轴承 Self-Lubricating Composite Bearing

www.hd-bearing.com

嘉善洪达复合轴承有限公司
JIASHAN HONGDA COMPOSITE BEARING CO.,LTD

地址: 浙江省嘉善县洪溪工业园区
电话: 0086-573-84617203 84953788
传真: 0086-573-84617201 84951080
邮箱: summer@jxdeliou.com
网站: www.hd-bearing.com

Address: Hongxi Industrial park,
Jiashan, Zhejiang, China.
Sale Tel: 86-573-84953788
Sale Fax: 86-573-84951080
Foreign Trade Tel: 0573-84617203
Foreign Trade Fax: 0573-84617201
E-mail: summer@jxdeliou.com

江西洪达自润滑轴承有限公司
JIANGXI HONGDA SELF-LUBRICATING BEARING CO.,LTD

地址: 江西省贵溪市工业园区
电话: 86-701-3339859
传真: 86-701-3339858
邮箱: summer@jxdeliou.com

Add: Industrial zone, Guixi City, Jiangxi, China.
Sales Tel: 86-701-3339015
Sales Fax: 86-701-3339858
E-mail: summer@jxdeliou.com